INSTRUCTION MANUAL

RACAL-DANA

MP MASTER
MA31100

RACAL
The Electronics Group

PUBLICATION NO. 980564

PRELIMINARY
OPERATORS
MANUAL

SERIES 200 STATE LOGIC ANALYZERS

INCLUDES MODELS: 201, 202 & 205

RACAL-DANA

RACAL-DANA INSTRUMENTS INC.
4 Goodyear Street, P.O. Box C-19541, Irvine, CA 92713, U.S.A.
Telephone: (714) 859-8999. Telex: 678-341 TWX: 910-595-1136

RACAL-DANA INSTRUMENTS LTD.
Duke Street, Windsor, Berkshire SL4 1SB, United Kingdom.
Telephone: Windsor (07535) 69811. TLX: 847013

RACAL-DANA INSTRUMENTS S.A.
18 Avenue Dutartre, 75150 Le Chesnay, France.
Telephone: (3) 955-8888. TLX: 697 215

RACAL-DANA INSTRUMENTS, GmbH
Hermannstrasse 29, D-6078 Neu Isenburg, Federal Republic of Germany
Telephone: 06102-2861/2. TLX: 412896

RACAL-DANA INSTRUMENTS, ITALIA srl
20161 Milano, Via Angeloni 8, Italy.
Telephone: (02) 6459558/6468189. TLX: 315697

RACAL

PUBLICATION DATE: MAY 1983

Copyright©1983 by Racal-Dana Instruments, Inc. Printed in the United States of America. All rights reserved. This book or parts thereof may not be reproduced in any form without written permission of the publishers.

WARRANTY

Within one year of purchase, Racal-Dana will repair or replace your instrument, at our option, if in any way it is defective in material or workmanship. The instrument must be returned to the country of purchase, unless prior arrangement has been made, and Racal-Dana Instruments will pay all parts and labor charges. Just call Racal-Dana Product Service at (714) 859-8999 in U.S.A., Windsor (07535) 69811 in England, (3) 955-8888 in France, 06102-2861/2 in Germany or (02) 6459558/6468189 in Italy for assistance. We will advise you of the proper shipping address for your prepaid shipment. Your instrument will be returned to you freight prepaid.

PROPRIETARY NOTICE

This document and the technical data herein disclosed, are proprietary to Racal-Dana Instruments, Inc., and shall not, without express written permission of Racal-Dana Instruments, Inc., be used, in whole or in part to solicit quotations from a competitive source or used for manufacture by anyone other than Racal-Dana Instruments, Inc. The information herein has been developed at private expense, and may only be used for operation and maintenance reference purposes or for purposes of engineering evaluation and incorporation into technical specifications and other documents which specify procurement of products from Racal-Dana Instruments, Inc.

FOR YOUR SAFETY

Before undertaking any maintenance procedure, whether it be a specific troubleshooting or maintenance procedure described herein or an exploratory procedure aimed at determining whether there has been a malfunction, read the applicable section of this manual and note carefully the WARNING and CAUTION notices contained therein.

The equipment described in this manual contains voltage hazardous to human life and safety and which is capable of inflicting personal injury. The cautionary and warning notes are included in this manual to alert operator and maintenance personnel to the electrical hazards and thus prevent personal injury and damage to equipment.

If this instrument is to be powered from the AC line (mains) through an autotransformer (such as a Variac or equivalent) ensure that the common connector is connected to the neutral (earthed pole) of the power supply.

Before operating the unit ensure that the protective conductor (green wire) is connected to the ground (earth) protective conductor of the power outlet. Do not defeat the protective feature of the third protective conductor in the power cord by using a two conductor extension cord or a three-prong/two-prong adaptor.

Maintenance and calibration procedures contained in this manual sometimes call for operation of the unit with power applied and protective covers removed. Read the procedures carefully and heed Warnings to avoid "live" circuit points to ensure your personal safety.

Before operating this instrument:

1. Ensure that the instrument is configured to operate on the voltage available at the power source. See Installation Section.

2. Ensure that the proper fuse is in place in the instrument for the power source on which the instrument is to be operated.

3. Ensure that all other devices connected to or in proximity to this instrument are properly grounded or connected to the protective third-wire earth ground.

If at any time the instrument:

- Fails to operate satisfactorily
- Shows visible damage
- Has been stored under unfavorable conditions
- Has sustained stress

It should not be used until its performance has been checked by qualified personnel.

Digitized by the Internet Archive
in 2025

https://archive.org/details/manualsplus_10407

TABLE OF CONTENTS

Section	Title	Page
1	**GENERAL DESCRIPTION**	1-1
1.1	Purpose	1-1
1.2	Scope	1-1
1.3	Product Support Group	1-1
1.4	State Logic Analyzer Series 200	1-1
1.5	Series 200 Options and Accessories	1-3
1.6	Change Notices	1-3
2	**INSTALLATION**	2-1
2.1	Purpose	2-1
2.2	Unpacking and Inspection	2-1
2.3	Bench Operation	2-1
2.4	Fixed-Mount Rack Installation	2-1
2.5	Power Connections	2-3
2.6	Grounding Requirements	2-5
2.7	Input-Output Connectors/Cables	2-5
2.7.1	Front Panel Probes/Connectors	2-5
2.7.2	Rear Panel BNC Connectors	2-6
2.7.3	Rear Panel GPIB Connector (Option 55)	2-7
2.7.4	Rear Panel Power Input Connector	2-7
2.7.5	Rear Panel Test Output Connector	2-7
2.8	Fuse Location and Replacement	2-8
2.9	Ventilation Requirements	2-8
2.10	Reshipment Packaging Requirements	2-8
3	**KEYBOARD & INDICATOR DESCRIPTION**	3-1
3.1	Introduction	3-1
3.2	Front Panel Description	3-1
3.2.2	Menu Keys	3-2
3.2.3	Display/Entry/Field Keys	3-3
3.2.4	Data/Memory Keys	3-4
3.2.5	Arm/Word Gen/Storage/Compare/GPIB Keys	3-5
3.2.6	Test Key	3-6
3.2.7	LED Indicators	3-7
3.2.8	CRT Display	3-7
3.2.9	Front Panel Inputs	3-7
3.2.10	Power Switch	3-7
3.3	Rear Panel Description	3-7
3.3.2	BNC Outputs	3-7
3.3.3	Test Output	3-8
3.3.4	Non-Volatile Memory Switch	3-8
3.3.5	GPIB	3-8
3.3.6	Power Input	3-8

TABLE OF CONTENTS (continued)

Section	Title	Page
4	**KEYBOARD OPERATION & DATA DISPLAY**	4-1
4.1	Introduction	4-1
4.2	Blinking Cursor	4-1
4.3	Field Keys	4-1
4.4	Entry Keys	4-2
4.5	Display Keys	4-4
4.6	Data Keys	4-6
4.7	Memory Keys	4-7
4.8	Compare Keys	4-7
4.9	Storage Keys	4-8
4.10	Arm Keys	4-10
4.11	Menu Keys	4-10
4.12	Test Key/Self-Check Menu	4-11
4.12.2	Test Key	4-11
4.12.3	Self-Check Tests	4-11
5	**MENU DESCRIPTION & OPERATION**	5-1
5.1	Introduction	5-1
5.1.1	Menu Definition	5-1
5.2	Introduction - Mode Menu	5-3
5.3	Introduction - Input Menu	5-8
5.4	Introduction - Trigger Menu	5-13
5.5	Introduction - Delay Menu	5-16
6	**WORD GENERATOR**	6-1
6.1	Introduction	6-1
6.2	Word Generator Keyboard	6-1
6.3	Word Generator Menu	6-2
6.3.4	Operating Mode	6-2
6.3.5	Data Entry	6-3
6.3.6	Memory Partitioning and Length	6-9
6.3.7	Display Format	6-10
6.3.8	Clock Source	6-10
6.3.9	Word Generator Probe	6-11
7	**GENERAL PURPOSE INTERFACE BUS**	7-1
7.1	Introduction	7-1
7.2	General Purpose Interface Bus (GPIB)	7-1
7.3	GPIB Description	7-4
7.3.3	Data	7-4
7.3.4	Handshake	7-4
7.3.5	Interface	7-6
7.4	GPIB-Bus Address Assignment	7-7
7.5	Bus Operation Sequence	7-9
7.6	Interface Message Repertoire	7-14
7.7	GPIB Key Functions	7-18
7.8	Device-Dependent GPIB Commands	7-19
7.9	Talk-Only Mode	7-20

TABLE OF CONTENTS (Continued)

Section	Title	Page
8	**GPIB ANALYZER**	8-1
8.1	Introduction	8-1
8.2	GPIB Analyzer Probe Connections	8-1
8.3	GPIB Analyzer Operation	8-1
8.4	GPIB Line Designations	8-3
8.5	GPIB Analyzer Application	8-4
8.5.2	GPIB Analysis - Internal Clock Mode	8-4
8.5.3	GPIB Analysis - External Clock Mode	8-5
9	**DISASSEMBLERS**	9-1
9.1	Introduction - Option 80	9-1
9.2	Installation - Option 80	9-1
9.2.1	PROM Installation	9-1
9.2.2	Microprocessor Probe Installation (Option 08)	9-2
9.2.3	Adaptor Installation	9-3
9.3	Operation - Option 80	9-3
9.3.1	Hardware/Software Operation	9-3
9.3.2	Software	9-5
9.3.3	Mnemonics Mode Display	9-5
9.4	Introduction - Option 68	9-9
9.5	Installation - Option 68	9-9
9.5.1	PROM Installation	9-9
9.5.2	Microprocessor Probe Installation (Option 08)	9-11
9.5.3	Adaptor Installation	9-11
9.6	Operation - Option 68	9-12
9.6.1	Hardware/Software Operation	9-12
9.6.2	Software	9-14
9.6.3	Mnemonics Mode Display	9-14
9.7	Introduction - Option Z80	9-17
9.8	Installation - Option Z80	9-17
9.8.1	PROM Installation	9-17
9.8.2	Z80 Microprocessor Probe Installation	9-19
9.9	Operation - Option Z80	9-20
9.9.1	Hardware/Software Operation	9-20
9.9.2	Software	9-21
9.9.3	Mnemonics Mode Display	9-21
10	**DRAWINGS**	10-1
11	**PARTS LIST**	11-1

LIST OF ILLUSTRATIONS

Figure	Title	Page
2.1	Series 200 Dimensional Outline	2-a
2.2	Fixed-Mount Rack Installation	2-2
2.3	Voltage Selector Card and Procedure	2-4
2.4	Front Panel Probes and Connectors	2-6
2.5	GPIB Connector (Rear Panel)	2-7
3.1	Front Panel Keyboard and Indicators	3-a
3.2	Rear Panel	3-a
4.1	Two Displays Showing Blinking Cursor Before Field Selection & Highlighted Field After Selection	4-1
4.2	Display Showing Completion of a Numerical Field Selection	4-2
4.3	Display Showing an Alternate Field Choice for "YES"	4-2
4.4	Display Showing "X" (Don't Care) After Entry in the Trigger Qualifier Field (Probe B)	4-3
4.5	Display Showing Numbered Information Lines of the Main Memory	4-3
4.6	Four Examples of Trigger Menu Displays Using Various bases with Probe Groupings	4-4
4.7	Display Showing 8-Line Waveform Using Single Probe	4-5
4.8	Display Showing Scrolling Function	4-6
4.9	Display Showing Paging Function	4-6
4.10	Displays Showing "Search Word" Found and Not Found in Auxiliary Memory	4-7
4.11	Display of Store Menu Before and After Data Storage Procedure	4-8
4.12	Display of Non-Volatile Memory Directory	4-9
4.13	Displays Showing Recall Menu (A) and Recall of Non-Volatile Memory Directory (B)	4-10
4.14	Test Selection Menu Display	4-11
4.15	Self-Test Probe and 4-Way Interconnect Cable Setup	4-12
4.16	Front Panel Key Designator Code	4-13
5.1	Mode Menu in Default Display	5-3
5.2	Input Menu in Default Display	5-8
5.3	Trigger Menu in Default Display	5-13
5.4	Delay Menu in Default Display	5-16
6.1	Word Generator Menu in Default Display	6-2
6.2	User ROM Header (11-Byte) Showing Hexadecimal Data by Address	6-5
6.3	Data Display for the Series 200 User ROM (shown without ROM header using a 19-byte offset)	6-6
6.4	User ROM Offset During Word Generator Load	6-7
6.5	User ROM Installation Socket U40 on CPU Assembly Board 401707	6-8
6.6	User ROM Installation Socket U39 on CPU Assembly Board 401661	6-8
6.7	Model of Word Generator Memory Showing Sample Output	6-9
6.8	Word Generator Information on Pod Housing	6-11

FIGURES (Continued)

Figure	Title	Page
7.1	202/205 GPIB-Bus Pin Connector (Rear Panel).....	7-2
7.2	202/205 Interface Signal Pin Assignments.....	7-2
7.3	Handshake Flow Chart.....	7-5
7.4	202/205 Interface Timing.....	7-13
7.5	202/205 Serial Poll Enable (SPE) Output.....	7-17
7.6	SRQ Operation from Front Keyboard.....	7-18
7.7	SRQ Syntax Diagram (Local Operation).....	7-19
8.1A	GPIB Waveform Display showing the Data, Handshake and ATN Lines.....	8-2
8.1B	GPIB Waveform Display Showing the Handshake and Interface Lines.....	8-2
9.1	8080/8085 PROM Installation Sockets Available on CPU Assembly Board 401707 (PROM P/N 230680).....	9-1
9.2	8080/8085 PROM Installation Sockets Available on CPU Assembly Board 401661 (PROM P/N 230603).....	9-2
9.3	Front Panel Installation of the 8-Bit Microprocessor Probe.....	9-2
9.4	8080/8085 Adaptor Connections.....	9-3
9.5	Input A and C Signal Line Designations for 8080/8085 Disassemblers on Trigger Display.....	9-4
9.6	8080/8085 Mnemonics Mode Display.....	9-6
9.7	6800/6809 PROM Installation Sockets Available on CPU Assembly Board 401707 (PROM P/N'S 230685-6800; 230686-6809).....	9-9
9.8	Front Panel Installation of the 8-Bit Microprocessor Probe...	9-11
9.9	6800/6809 Adaptor Connections.....	9-12
9.10	Input A and C Signal Line Designations for 6800/6809 Disassemblers on Trigger Display.....	9-13
9.11	6800/6809 Mnemonics Mode Display.....	9-15
9.12	Z80 PROM Installation Sockets Available on CPU Assembly Board 401707 (PROM P/N 230691).....	9-17
9.13	Front Panel Installation of the 8-Bit Microprocessor Probe.....	9-19
9.14	Z80 Microprocessor Probe and Cable Assembly.....	9-19
9.15	Input A and C Signal Line Designations for the Z80 Disassembler on Trigger Display.....	9-20
9.16	Z80 Mnemonics Mode Display.....	9-22

LIST OF TABLES

Table	Title	Page
1.1	Series 200 Options & Accessories	1-2
7.1	IEEE-488 1978 Standard Interface Subset Capability	7-3
7.2	202/205 Address Selection	7-8
7.3	Bus Operation Sequence	7-10
7.4	Interface Messages Used With Model 202/205 Analyzers	7-15
7.5	202/205 Input GPIB Program Commands	7-20
7.6	202/205 Output GPIB Program Commands	7-21
7.7	202/205 Output GPIB Program Commands	7-32
7.8	202/205 Error Code Messages	7-38
8.1	Series 200 GPIB Analyzer Line Designations	8-3
9.1	Input Menu Settings for 8080/8085 Disassemblers	9-5
9.2	6800/6809 PROM Installation Requirements for CPU Assembly Board 401661	9-10
9.3	Input Menu Settings for 6800/6809 Disassemblers	9-14
9.4	Z80 PROM Installation Requirements for CPU Assembly Board 401661	9-18
9.5	Input Menu Settings for the Z80 Disassembler	9-21
11.1	List of Suppliers	11-2

SPECIFICATIONS

1.0 GENERAL SPECIFICATIONS

1.1 Power Requirements

1.1.1	Input Voltage:	100/120/220/240 VAC ± 10% at 45-60 Hz; 150 VA
1.1.2	Instrument Weight:	Approximately 30 lbs.
1.1.3	Instrument Dimensions:	177.8H X 424.2W X 482.6D (mm); 7H X 16.7W X 19D (in)

1.2 Environmental Requirements

1.2.1	Temperature Range:	Operation: 0° C to + 50° C Storage: -40° C to + 70° C
1.2.2	Humidity:	40° C 75% RH 25° C 95% RH

1.3 CRT Display

1.3.1	CRT Design:	7-inch (diagonal) green phosphor-coated (P-31)
1.3.2	Display Size:	20 lines deep X 50 characters wide

1.4 Warranty

Standard warranty statement

2.0 OPERATING SPECIFICATIONS (Applies to all three models unless noted)

2.1 Signal Inputs

2.1.1	Data Channel Width:	32 (201); 48 (202/205) bits
2.1.2	Data Word Depth:	250 words
2.1.3	Clock Inputs:	1 or 2 clocks (multiplexed or common) available with independent clock qualification
2.1.3.1	Clock Qualifiers:	2
2.1.3.2	Minimum Pulse Width (at threshold):	25 nSec

2.1.3.3	Internal Clock Rate:	Variable to 10 MHz
2.1.3.4	External Clock Rate: (positive or negative slope)	To 10 MHz (201); to 12 MHz (202/205)
2.1.4	Trigger Qualifiers:	2
2.1.5	Probe Provision:	2 Fixed TTL (201); 3 Variable Threshold (202/205) - see paragraph 2.10 for probe specifications
2.1.6	Setup Time (Data/Qualifier):	30 nSec, nominal 35 nSec, minimum
2.1.7	Hold Time (Data/Qualifier):	Ø nSec
2.1.8	Logic Complement:	Positive or Negative Logic Display

2.2 Operating Modes

2.2.1	Normal:	Using the RUN key, up to 250 words of data are captured after triggering conditions are met.
2.2.2	Auto:	After selecting a pause of Ø-999 sec, reinitiation of data capture occurs
2.2.3	Stop-On-Equals: (and Stop-On-Not-Equals)	Run automatically reinitiates until data captured in the main memory either equals or does not equal data stored in the auxiliary memory. Memory depth for data comparison ranges from 1 to 250 words

NOTE

The following two data collection modes should be distinguished for Series 200 state analyzers:

(A) **Sequential** - After triggering conditions are met, data is captured in sequence, one word per qualified clock from 1-250 in depth

(B) **Trace** - After trigger conditions are met, the trigger word and up to 16 post-trigger words are stored every time the trigger word is detected.

2.3	Data Display Bases/Formats	8 or 16-bit groupings can be selected in hexadecimal, binary and octal bases; ASCII, timing or an optional mnemonic format
2.4	Triggering	
2.4.1	Sequential Triggering:	1-4 levels with 2 delays, as: Arm Word 1, Arm Word 2, Arm Word 3, Delay 1, Trigger Word and Delay 2
2.4.2	Trigger Delays:	Ø to over 10^6 events/clocks
2.4.3	Auto-Add Delay:	A fixed incremental trigger delay is added to each run
2.4.4	Masking Capability:	Available at all trigger/arming levels
2.4.5	Pretrigger Count:	Ø-249 pretrigger word range is available
2.4.6	Restart Feature:	Full-width restart word can be entered for reinitialization if restart word is detected during the triggering sequence
2.4.6.1	Restart Recovery Time:	8 clock cycles
2.5	Time Interval Measurement (ie: Arm Word 3 to Trigger Word)	
2.5.1	Time Interval Range:	Ø to over 10^6 events/clocks; or 100 nSec to 290 hrs in 3 ranges: 100 nSec-0.5 Sec (nSec range), 1 µSec-17 min (µSec range) and 1 mSec-290 hrs (mSec range)
2.5.2	Time Interval Resolution:	100 nSec ± 0.1% (all 3 ranges) or 1 event
2.5.3	Time Interval Display:	7-digit display in secs or events on header above the main memory data
2.6	Memories	
2.6.1	Main Memory:	Data acquisition to a depth of 250 words possible
2.6.2	Auxiliary Memory:	Data storage after transfer from either the main or non-volatile memories (both to a depth of 250 words)
2.6.3	Non-Volatile Memory: (202/205 analyzers only)	Permanent data storage: Word Generator Setups, Menu Setups and Auxiliary Data

2.6.4	Volatile Memory:	Temporary storage of 1 additional set of menu setups
2.7	Compare Features	
2.7.1	Compare Modes:	Auxiliary to Main Memory; Stop-On-Equals and Stop-On-Not-Equals
2.7.1.1	Compare Mode Display:	Field differences highlighted to the byte level in reverse video
2.7.1.2	Compare Memory Length:	Word-length selection of 1 to 250 possible on both Stop-On-Equals and Stop-On-Not-Equals modes
2.8	Data Manipulation (Main or Auxiliary Memory)	
2.8.1	Scrolling:	Forward/Reverse; Single Line/Scrolling operation
2.8.2	Paging:	Forward/Reverse; Single Page/Paging operation
2.8.3	Searching:	Forward/Reverse operation to specific search word; is displayed in counter (99 maximum) with all occurrences in full memory highlighted after first search
2.8.4	Locating:	Direct access to any location in main memory (Begin, End, Trigger and Specific Line Location)
2.9	Signal Outputs	
2.9.1	Composite Video:	Signal level is >1.5 V into 75
2.9.2	Trigger Output (202/205):	TTL pulse of one clock cycle (clock width within $\approx$150 nSec after trigger conditions are met with respect to the clock)
2.9.3	Trace Output(202/205):	TTL level, starting low and setting high within $\approx$150 nSec after trigger conditions are met with respect to the clock
2.9.4	Word Generator Sync (202/205):	TTL pulse of one clock
2.9.5	System Interface:	GPIB (IEEE-Std-488)

2.10 Probe Specifications

2.10.1 Fixed Probes

2.10.1.1 Signal Input Range:	-1.5 to +5.5 V
2.10.1.2 Input Impedance:	≤1 LSTTL load
2.10.1.3 Input Capacitance:	≤25pF at probe connector
2.10.1.4 Maximum Repetition Rate:	12 MHz

2.10.2 Variable Probes

2.10.2.1 Minimum Clock Pulse Width:	≥25 nSec at trigger point
2.10.2.2 Signal Input Range (Max)	±15 V
2.10.2.3 Input Impedance:	=45KΩ ± 1%
2.10.2.4 Input Capacitance:	≤12pF at probe connector
2.10.2.5 Maximum Repetition Rate:	12 MHz
2.10.2.6 Threshold Adjustment:	Variable over ± 9V referenced to input, nominal (±8 V minimum). Two selectable probe operation positions (TTL or Variable)

3.0 **OPTION SPECIFICATIONS**

3.1 Word Generator (202 - Option 49; 205 - Standard)
See Section 6 in the Operator's Manual

3.1.1	Output Modes:	Single Word; Single Cycle of N Words; Continuous Cycle of N Words with N ranging from 1 to 250
3.1.2	Data Setup:	Manual data entry using the keyboard; using a preprogrammed 2716 EPROM; using the GPIB and, finally, using an internal preset data pattern.
3.1.3	Word Size:	16-bit width
3.1.4	Memory Depth:	1 to 250 words selectable
3.1.5	Bases:	Hexadecimal, Binary and Octal Loading and Display

3.1.6	Clocks:	Internal or External (Internal Clock is Programmable from 200 nSec-999 sec)
3.1.6.1	Maximum Clock Rate:	7 MHz (External) 5 MHz (Internal)
3.1.6.2	External Clock Pulse Width:	$\geq$25 nSec
3.1.7	External Clock to Data Synch	$\leq$100 nSec maximum
3.1.8	Word Generator Probe	
3.1.8.1	Output Modes:	NRZ/Fixed RZ/Variable RZ, selected by a 3-position switch
3.1.8.2	Fixed RZ:	Return to zero $\approx$ 1/2 clock cycle
3.1.8.3	Variable RZ Ranges:	Two ranges are available: $\approx$0.15 to 1 uSec, and $\leq$1 to 10u Sec
3.1.8.4	Data Synch. to Word Output:	$\leq$30 nSec
3.1.8.5	Input Loading: (external clock and clock inhibit inputs)	1 LSTTL load
3.1.8.6	Output Drive: (Open Collector with internal 470Ω pull-up)	I_{OL} = 30 mA I_{OH} = 5 mA V_{MAX} = 15V

3.2 GPIB Interface (202-Option 55; 205-Standard)
(See Section 7 in the Operator's Manual)

3.2.1 Subset Capability:

IEEE-488-1978 Standard Interface Subset Capability

GPIB Subset	Description	Applicable Capability
SH1	Source Handshake	Complete Capability
AH1	Acceptor Handshake	Complete Capability
T5	Talker	Complete Capability (1) Basic Talker (2) Serial Poll (3) Talk-Only Mode (4) Unaddress if MLA
L4	Listener	Complete except Listen Only (1) Basic Listener (2) Unaddress if MTA
SR1	Service Request	Complete Capability
RL1	Remote/Local	Complete Capability (1) REN - Remote Enable (2) LLO - Local Lockout (3) GTL - Go to Local
PP0	Parallel Poll	No Capability
DC1	Device Clear	Complete Capability (1) DCL - Device Clear (2) SDC - Selected Device Clear
DT1	Device Trigger	Complete Capability GET - Group Execute Trigger
C0	Controller	No Capability
E1	Open Collector Bus Drivers	

3.2.2 GPIB Address: Set on rear-panel; displayed in UNIT menu

3.2.3 GPIB Address Time: 10 μSec

3.3 Non-Volatile Memory (202-Option 50; 205-Standard

3.3.1	Non-Vol Capacities:	202 (6K bytes) 205 (12K bytes)
3.3.2	Data Storage Categories:	Menu Setups (.5K bytes) Word Generator Setups (.5K bytes) Auxiliary Data (1.5K bytes)
3.3.3	Non-Vol Write Times:	Menu Setups $\approx$ 7 secs Word Generator Setups $\approx$ 13 secs Auxiliary Data $\approx$ 40 secs

3.4 GPIB Analyzer, (Option 48 - all models)
(See Section 8 in the Operator's Manual)

3.4.1	Input Loading:	1 IEEE-488 standard load (approximately 2 standard TTL loads)

3.5 Microprocessor/Adaptor Interface Probe (Options 08, 68 and 80)
(See Section 9 in the Operator's Manual)

3.5.1	Input Loading:	1 LSTTL load
3.5.2	Channels Available:	29 Data Channels, 2 Clocks, 2 Clock Qualifiers and 2 Trigger Qualifiers

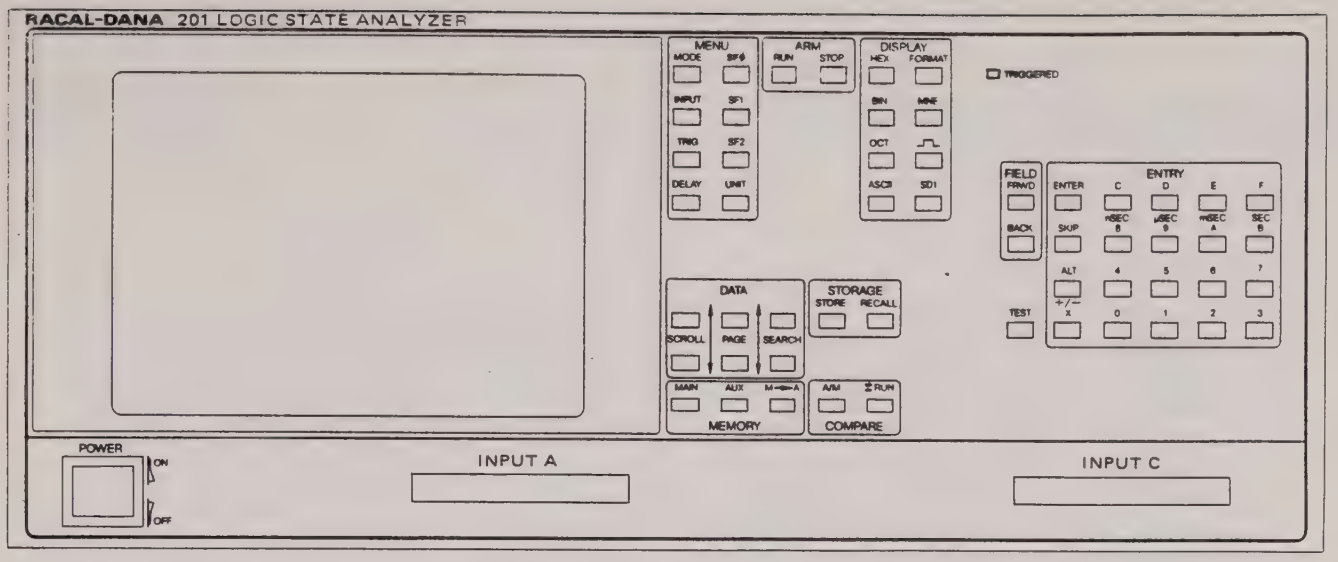

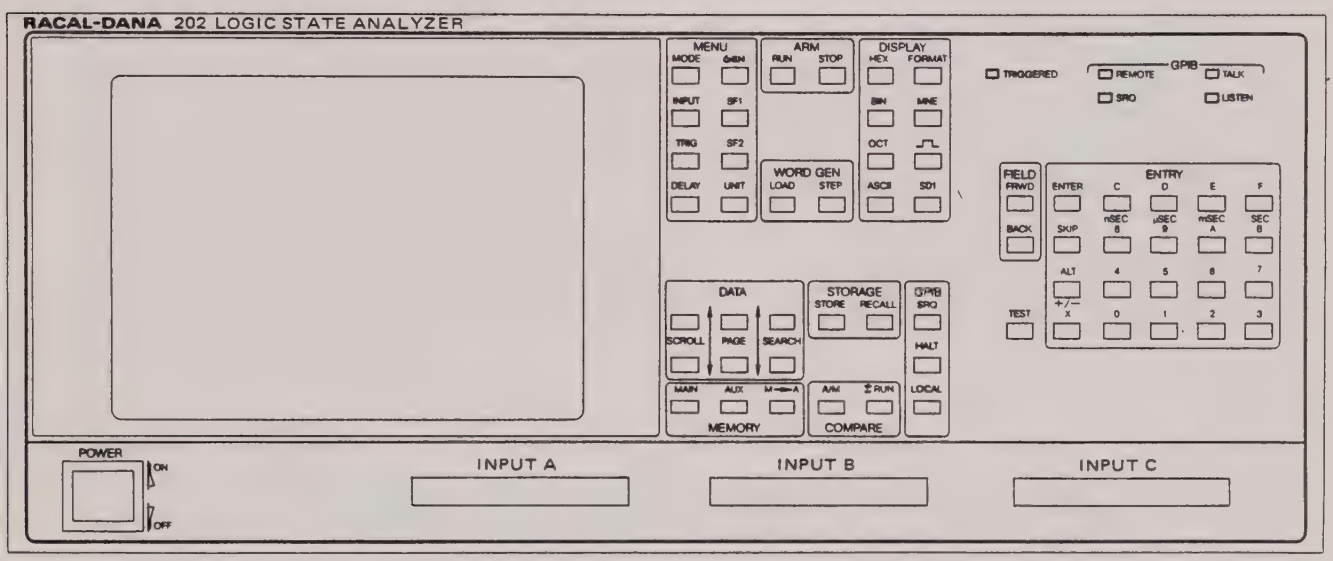

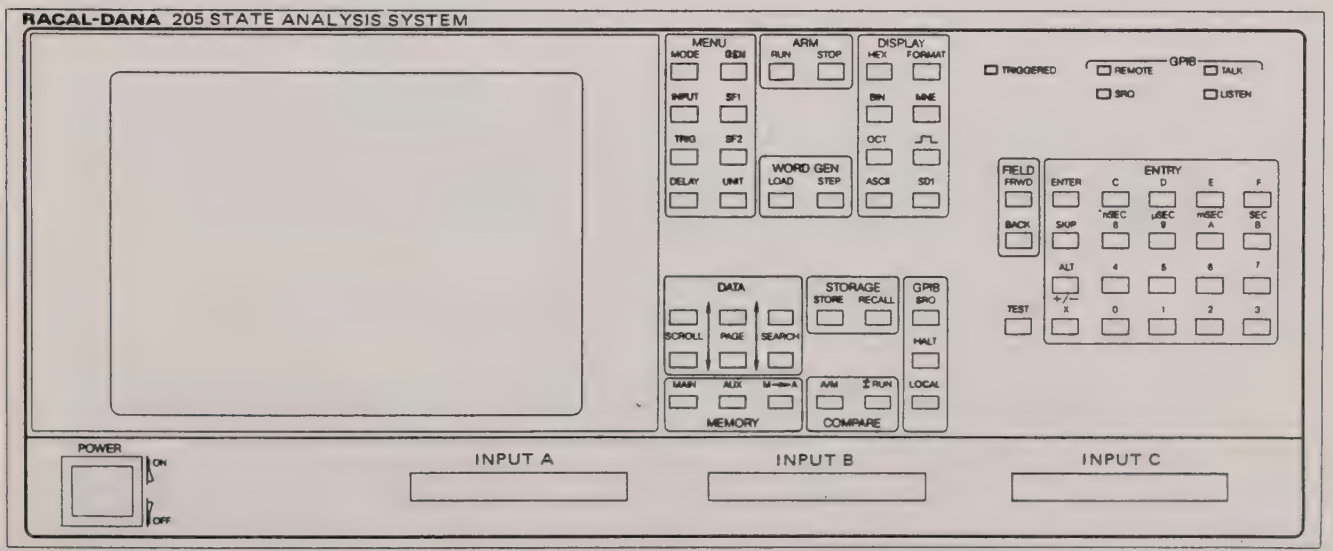

View of Series 200 Units

SECTION 1 GENERAL DESCRIPTION

1.1 PURPOSE

1.1.1 Racal-Dana Instruments has prepared this Operator's Manual for the State Logic Analyzer Series 200 which includes Models 201, 202 and 205. Whenever members of Series 200 are mentioned in the text, they will simply be designated by their model numbers (for example, the State Logic Analyzer Model 201 will be called the 201). Regardless of the operator's level of experience with state logic analyzers, it is strongly recommended that everyone read this manual completely at least once, preferably while working with the instrument. If this is your first time using a state logic analyzer, you can greatly facilitate your familiarization of the unit's operational capabilities by proceeding page-by-page through this Operator's Manual.

1.1.2 Models of Series 200 are very "tolerant" units. That is, if while reading through this manual, one discovers some procedure or feature that is **not** fully understood, attempt it on your instrument. The analyzer will **not** be damaged by such efforts and the operator will gain much valuable experience through such "hands-on" efforts. If any procedure that one tries on the unit is not acceptable or is improperly applied to the instrument, it will display the discrepancy on the screen in the form of an advisory to the operator. The operator can then remedy the problem without fear of disturbing any original menu set-up. Finally, because Series 200 instruments are extremely sensitive instruments with sophisticated capabilities, it would be prudent for every operator to use this manual as a ready-reference tool every time a new and/or complex measurement situation presents itself. Keep the manual near your instrument.

1.2 SCOPE

1.2.1 The Series 200 Operator's Manual provides sufficient information for any qualified person to properly operate all three members of the analyzer family.

1.3 PRODUCT SUPPORT GROUP

1.3.1 The Racal-Dana Irvine complex maintains a complete engineering laboratory, field engineers, service department and parts department to support its product committment. Further support is provided by a network of area field representatives and service centers. The complete list appears on the last two pages of the manual. The warranty program declaration is presented in the front matter of this manual; also, service personnel are available for service consultation.

1.4 STATE LOGIC ANALYZER SERIES 200

1.4.1 Although each member of the Series 200 has a different performance capability, all three models use a menu format for set-ups by means of a 7-inch CRT display and keyboard. Standard features on all instruments include: scroll/paging of data, search/locate capabilities, period-interval measurement, multiplex clocks, trace/trigger operation including 4 arm/trigger words with full masking, two delays and a recall feature.

Table 1.1 - Series 200 Options & Accessories

Options and Accessories	Option No.	201	202	205
8-Bit μP Interconnect Assy Including Probe & Module Assy (40-Pin Socket)	08	Yes	Yes	Yes
GPIB Analyzer/Probe Assy	48	Yes	Yes	Yes
Word Generator Including Probe Assy & Grabber Kit	49	Not Avail.	Yes	Std
Non-Vol Memory Assy	50	Not Avail.	Yes (6K-byte)	Std (12K-byte)
GPIB Interface Assy	55	Not Avail.	Yes	Std
Rack Mounting Kit	60	Yes	Yes	Yes
6800/6802/6809 Dedicated Kit (Adaptors)	68	Yes	Yes	Yes
100V, 220V, 240V Assy	71	Yes	Yes	Yes
8080/8085 Dedicated Kit (Adaptors)	80	Yes	Yes	Yes
Variable Threshold Probe (Assy With Grabber Kit)	90	Yes	Std (3)	Std (3)
Fixed Threshold Probe (Assy With Grabber Kit)	91	Std (2)	Yes	Yes
Service Kit Option	-	Yes	Yes	Yes
GPIB Analyzer Probe Assy	-	Yes	Yes	Yes
GPIB Data Cable Assy	-	Yes	Yes	Yes
40-Pin Clip Cable Assy	-	Yes	Yes	Yes
40-Pin Plug Cable Assy	-	Yes	Yes	Yes
Probe Input Cable Assy	-	Yes	Yes	Yes
Grabber Kit	-	Yes	Yes	Yes
1 Meter GPIB Cable	-	No	Yes	Yes
2 Meter GPIB Cable	-	No	Yes	Yes
4 Meter GPIB Cable	-	No	Yes	Yes
Accessory Storage Pouch	-	Yes	Std	Std

1.4.2 The following description presents a brief comparison of the different performance features for the 201, 202 and 205.

(A) **Model 201:** This unit is 32 Channels wide with a Memory Depth of 250 words and a Maximum Sampling Rate of 10 MHz with two fixed probes as standard equipment.

(B) **Model 202:** This unit is 48 Channels wide with a Memory Depth of 250 words and a Maximum Sampling Rate of 12 MHz with three variable probes as standard equipment.

(C) **Model 205:** This unit is the same as the 202 but also includes a 16-Channel Word Generator including Probe, GPIB interface, and a 12K-byte Non-Volatile Memory feature.

1.5 SERIES 200 OPTIONS AND ACCESSORIES

1.5.1 Refer to Table 1.1 for a complete list of options and accessories available for Series 200 state analyzers. **NOTE:** the designation "YES" indicates that the listed option or accessory is available, but does not come with the unit as standard equipment.

1.6 CHANGE NOTICES

1.6.1 Improvements or changes to the equipment which occur after the printing of this Operator's Manual will be explained in a Change Notice Sheet in the front of the manual after the Safety Notice.

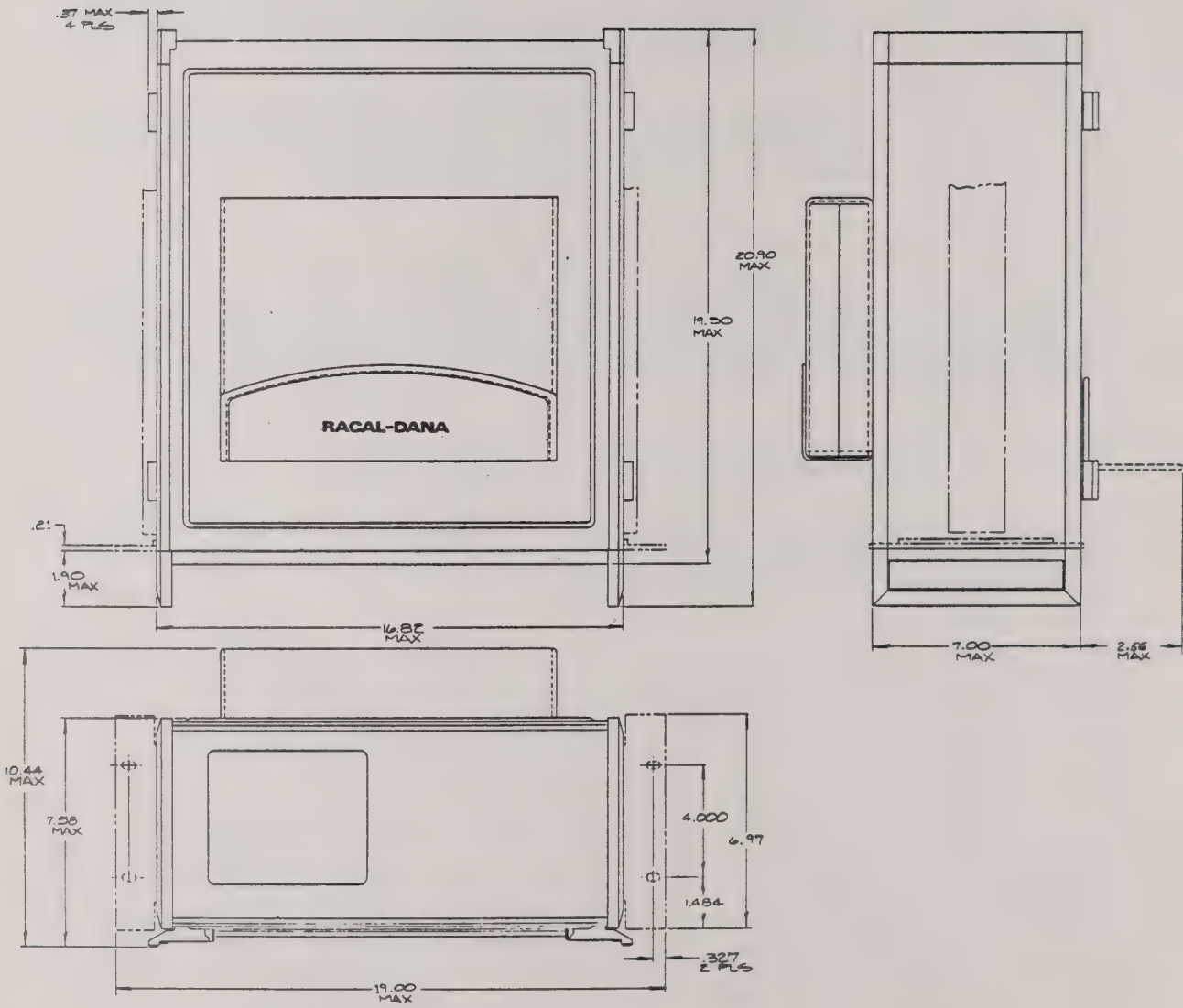

Figure 2.1 - Series 200 Dimensional Outline

SECTION 2 INSTALLATION

2.1 PURPOSE

2.1.1 This section provides basic information regarding unpacking, initial set-up, bench operation and fixed-mount rack installation for Series 200 logic analyzers.

2.2 UNPACKING AND INSPECTION

2.2.1 Prior to unpacking the new instrument, examine the exterior of the shipping carton. Note any irregularities on the shipping bill. All Series 200 analyzers are packed in a molded plastic-foam form within the cardboard shipping carton. The plastic form holds the instrument securely in the carton and absorbs any reasonable external shock encountered during transit.

2.2.2 Next, carefully remove the instrument and plastic-foam packaging from the carton. Inspect the exterior of the instrument for any signs of damage or defect. If such damage or defect is observed, notify the carrier immediately.

2.3 BENCH OPERATION

2.3.1 Figure 2.1 on the facing page provides dimensional information for Series 200 instruments. Refer to this illustration whenever necessary.

2.3.2 For easier bench operation, all models are equipped with four bench-feet incorporating nonslip inserts and a tilt-bail ("kickstand") which elevates the front of the unit for convenient viewing. The tilt-bail is attached to the front two bench-feet on the bottom cover of the unit. For use, the tilt-bail is pulled down into its vertical (supporting) position.

2.4 FIXED-MOUNT RACK INSTALLATION

2.4.1 In addition to bench operation, Series 200 instruments can be converted for mounting in a standard 19-inch equipment rack using the Option 60 "Fixed-Mount" package. This 7-inch rack mount kit includes a pair of custom-mount right-angle brackets, four flat-head #8-32 X 1/2 screws and two front handles. To assemble the mounting brackets and complete fixed rack installation, refer to Figure 2.2; then proceed as follows after placing a protective cloth, if necessary, on the work bench.

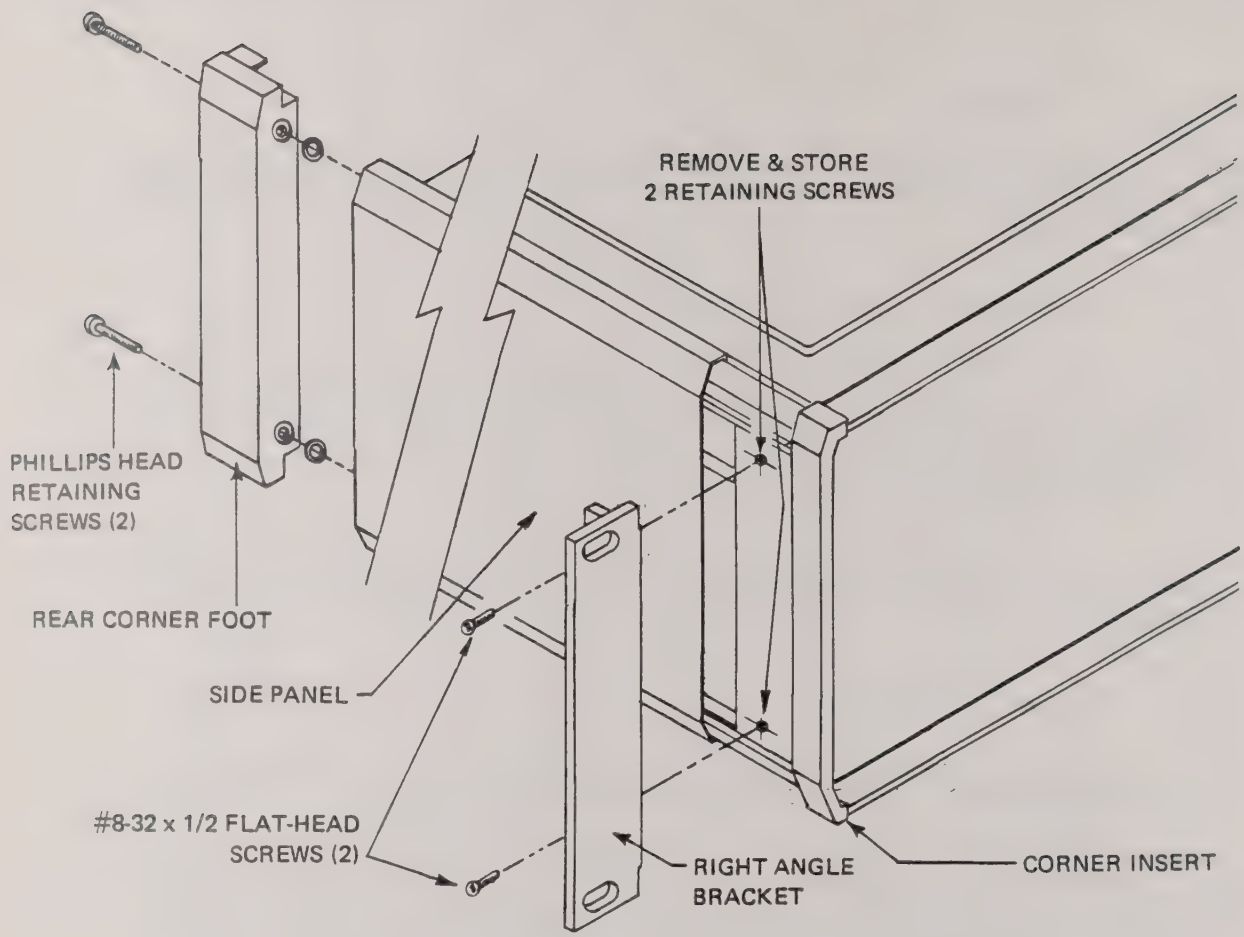

Figure 2.2 - Fixed-Mount Rack Installation

WARNING

Removal of instrument covers exposes potentially lethal voltages. Avoid contact with internal electrical connections while the unit is connected to the AC power source.

a) Place the instrument in its normal operating position (i.e. resting on its four bench-feet), but with the four rubber bumper-feet on the right-hand side panel facing the user. Remove these four bumpers from the side panel and set them aside with their hardware.

b) Reposition the instrument with the rear panel facing the user. Remove the two Phillips-head retaining screws from each rear corner-foot. Use a size #2 screwdriver in completing this step. (The two rear corner-feet prevent the two side panels from sliding backwards.) Remove and set aside the two rear corner-feet with their hardware.

c) Remove both side panels by sliding them in their respective retaining tracks towards the rear of the instrument. With the side panels now removed, the two front corner-inserts and their Phillips-head retaining screws (two for each insert flange) are exposed.

d) Before assembling the right-angle brackets, place the instrument on its right side (i.e. the side from which the four bumpers were removed). Remove the bottom cover by sliding it at least one-half inch in its retaining track towards the rear of the instrument, carefully lifting the cover out of the frame.

e) Disassemble the four bench-feet and tilt-bail from the bottom cover. This is easily accomplished by unscrewing the single Phillips-head retaining screw for each bench-foot from inside the bottom cover.

f) Replace the bottom cover ensuring that the front of the cover seats evenly and firmly in its front-panel slot. Reposition the instrument in its normal operating position again.

g) Next, remove the two retaining screws from each front corner-insert.

h) While keeping the two corner-inserts in their original position, place one of the two right-angle brackets over each of the corner-inserts, aligning the two mounting holes of the former with the two corner-insert screw holes.

i) Insert the two flat-head #8-32 x 1/2 screws (supplied with the option) through both right-angle bracket/corner-insert flange combinations; tighten to secure both hardware units to the instrument frame.

NOTE

At this time, if the user desires, the two front handles supplied with Option 60 may be substituted for the corner-inserts.

j) To secure the top and bottom covers on the chassis, reinstall the two rear corner-feet, using the original Phillips-head screws.

k) Finally, store the two side panels, four bumper-feet and hardware, four bench-feet, tilt-bail, and corner-insert hardware.

2.4.1.1 At some point, it may be necessary to convert the instrument back for bench operation. To accomplish this, simply reinstall those parts specified in step "k" of paragraph 2.4.1, using the text of this procedure when necessary.

2.5 POWER CONNECTIONS

2.5.1 Refer to Figure 2.3 showing the voltage selector card and its proper orientation for operating on any of the four line voltages. Refer to Figure 3.2 showing all the rear panel features. Standard instruments operate on either 100, 120, 220 or 240 volts, 50 to 60 Hz. Maximum power consumption is 150 watts. Operation on any of the four line voltages is selected by inserting the small printed circuit card, required side up/readable right-side up, into the combination voltage selector/fuse holder/power cord connector assembly. Selection of a specific line voltage is accomplished as follows:

a) Disconnect the power cord from the AC power source.

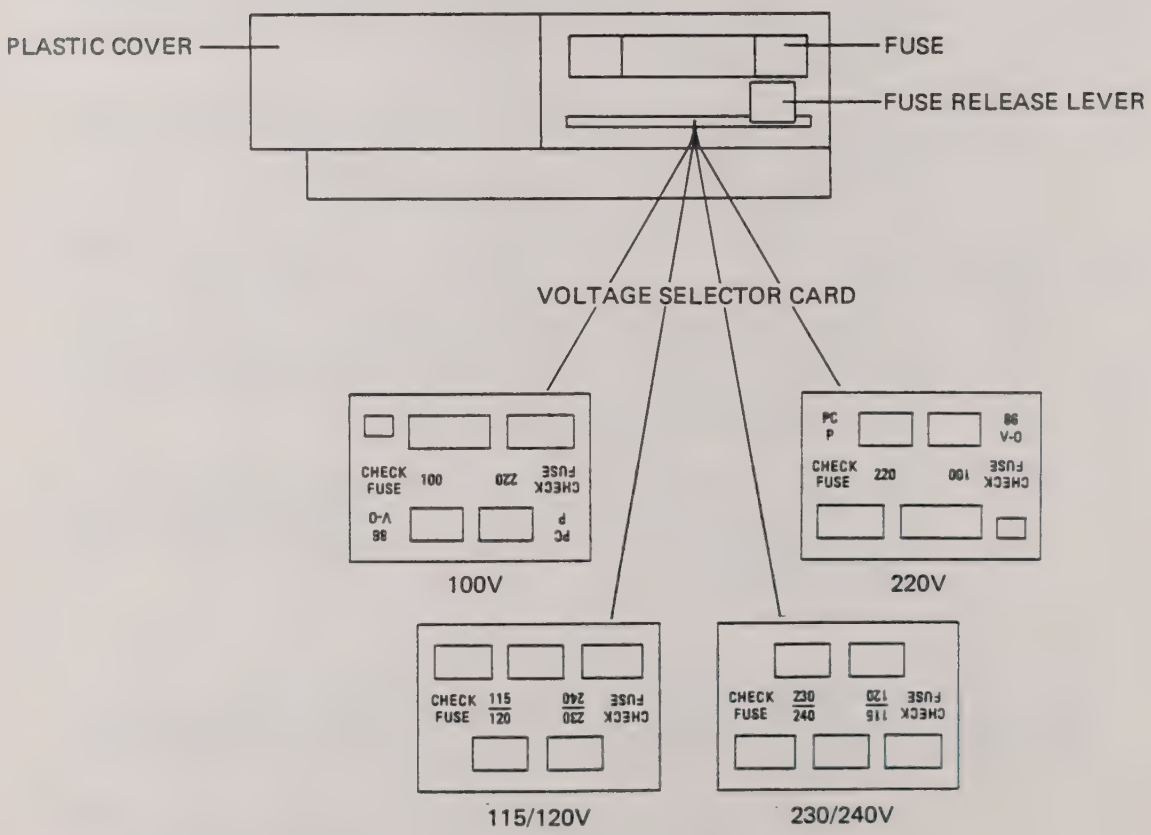

Figure 2.3 - Voltage Selector Card and Procedure

b) Slide the transparent plastic fuse cover to the left so that it covers the power cord connector pins. This exposes the fuse and voltage selector device.

c) Pull the small lever marked FUSE PULL and swing it completely to the left. This releases the fuse from the fuse holder, making the voltage selector card accessible for removal.

d) Remove the voltage selector card and reinsert it so that the desired operating line-voltage designation is visible. (Using a small pair of needle-nose pliers can be very helpful in completing this step.) Ensure that the selector card is correctly oriented as described above.

e) Swing the lever marked FUSE PULL back completely to the right and snap it into the closed position.

f) Replace the fuse in its holder, verifying that line voltage settings of 200 or 240V have a 1 amp. fuse installed; that line voltage settings of 100 or 120V have a 2 amp. fuse installed.

g) Slide the plastic fuse cover completely to the right so that it covers the voltage selector card and fuse. The designation for the selected line voltage should now be visible through the small view window on the rear panel.

h) Plug the power cord into the AC cord connector. The instrument is now ready for operation.

2.5.2 A standard power cable having a 3-pin plug is supplied with each instrument. It connects to the power connector J204.

2.6 GROUNDING REQUIREMENTS

2.6.1 Both the front panel and cabinet of all Series 200 analyzers are grounded in accordance with MIL-T-28800C to protect the user from possible injury due to shorted circuits. The 3-conductor AC power cable supplied with the instrument maintains a low impedance path to ground when properly connected to a 3-wire single-phase AC receptacle. The ground pin itself is connected to the instrument case. It is important that this pin be connected to a good earth ground. All devices connected to or in proximity to this instrument must maintain the third-wire earth ground intact as stated in current regulations.

2.7 INPUT-OUTPUT CONNECTORS/CABLES

2.7.1 Front Panel Probes/Connectors

2.7.1.1 Figure 2.4 shows the signal line designators and color-codes for the 20-lead ends found on the pod housing of the fixed (a) and variable (b) threshold probes. Both the fixed and variable probes incorporate 16 data lines as well as a clock, clock and trigger qualifier, and ground lines.

NOTE

INPUT B (J101) utilizes INPUT C's clock during the operation of the instrument.

Refer to Paragraph 6.3.9 and Figure 6.2 for corresponding information for the word generator probe.

2.7.1.2 The front-panel Input connectors are 34-pin header receptacles (double row, 17 pins per row). These receptacles are designated J100 and 102 (Model 201) and J100, 101 and 102 (Models 202 and 205), and correspond to front-panel designations INPUT A, INPUT B and INPUT C, respectively.

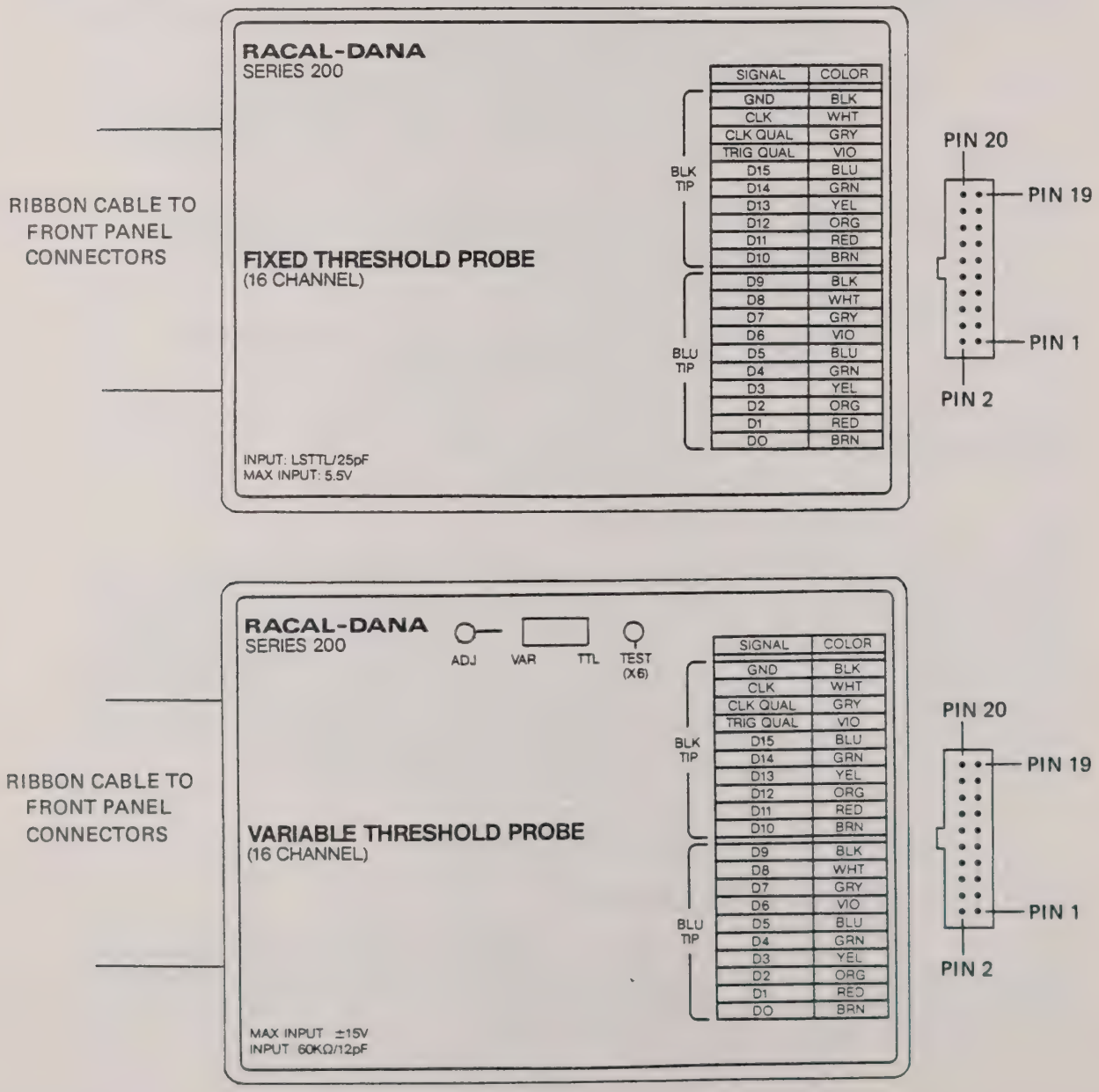

Figure 2.4 - Front Panel Probes and Connectors

NOTE

Model 201 provides INPUTS A and C, Models 202 and 205 provide INPUTS A, B and C.

2.7.1.3 Probe/System Interface is achieved using either the 20-pin header receptacle or the Grabber (Kit) supplied with the standard probe package.

2.7.1.4 A 36-inch Cable (Ribbon) interconnects the Probe pod and front-panel Input connectors.

2.7.2 **Rear Panel BNC Connectors**

2.7.2.1 The four BNC connectors (one on the 201) on the rear panel are described in Paragraph 3.3.2 and depicted in Figure 3.2 to which the user is referred.

2.7.3 **Rear Panel GPIB Connector (Option 55)**

2.7.3.1 Refer to Figure 2.5 showing the rear-panel GPIB connector and pin-signal assignments. When Option 55 is installed on the 202 (Option 55 is standard on the 205; unavailable on the 201), the instrument can be used in a system configuration. This 24-pin connector (J205) conforms to the IEEE-488-1978 Standard Interface Specification. The GPIB interface also accepts Racal-Dana's GPIB Input/Output Cables: 1 meter (3.28 feet, P/N 406845); 2 meters (6.56 feet, P/N 406844) and 4 meters (13.12 feet, P/N 406846).

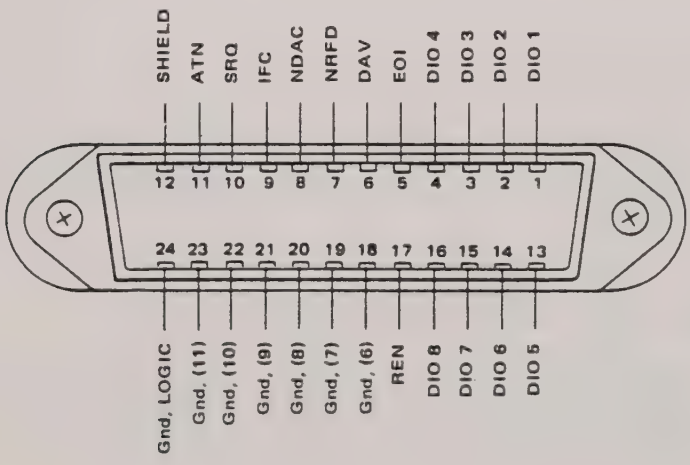

Figure 2.5 - GPIB Connector (Rear Panel)

2.7.4 Rear Panel Power Input Connector

2.7.4.1 The Power Input connector J204 accepts the 3-pin plug of the standard power cable supplied with every instrument.

2.7.5 Rear Panel Test Output Connector

2.7.5.1 The 20-pin Test Output connector J200 is shown in Figure 3.2 to which the user is referred. This feature permits the user to verify the integrity of the input system and interfacing probes.

2.8 FUSE LOCATION AND REPLACEMENT

2.8.1 Refer to Figure 2.3. AC Line Fuse F200 is retained by a clip-holder and located immediately above the voltage card selector within the Input Power compartment on the rear panel. To remove the fuse for inspection and/or replacement, disconnect the power cord, slide the plastic fuse cover and then the FUSE PULL level completely to the left. Remove the released fuse.

2.8.2 The mA current limiting fuse F2 is located on the Motherboard PCB assembly. Access to this fuse is accomplished by removing the top cover. Follow the instructions for removal of the top and bottom covers set forth in Paragraph 2.4.1.

WARNING

Removal of instrument covers exposes potentially lethal voltages. Avoid contact with internal electrical connections while the unit is connected to the AC power source.

2.9 VENTILATION REQUIREMENTS

2.9.1 To maintain an internal temperature within safe limits, it is important not to obstruct the airflow through the instrument. Inspect and clean the air filter periodically, ensuring that fan intake air is not excessively preheated from other equipment exhaust.

2.10 RESHIPMENT PACKAGING REQUIREMENTS

2.10.1 The shipping carton, with its molded plastic foam form, is specifically designed to provide the required support necessary for safe reshipment. Whenever possible, the original shipping carton and foam form should be used.

2.10.2 If reshipment becomes necessary and the original packaging is not available, reconstruct it as much as possible. This can be done using a can of plastic spray-foam to surround and protect the instrument in either the original or a new shipping carton.

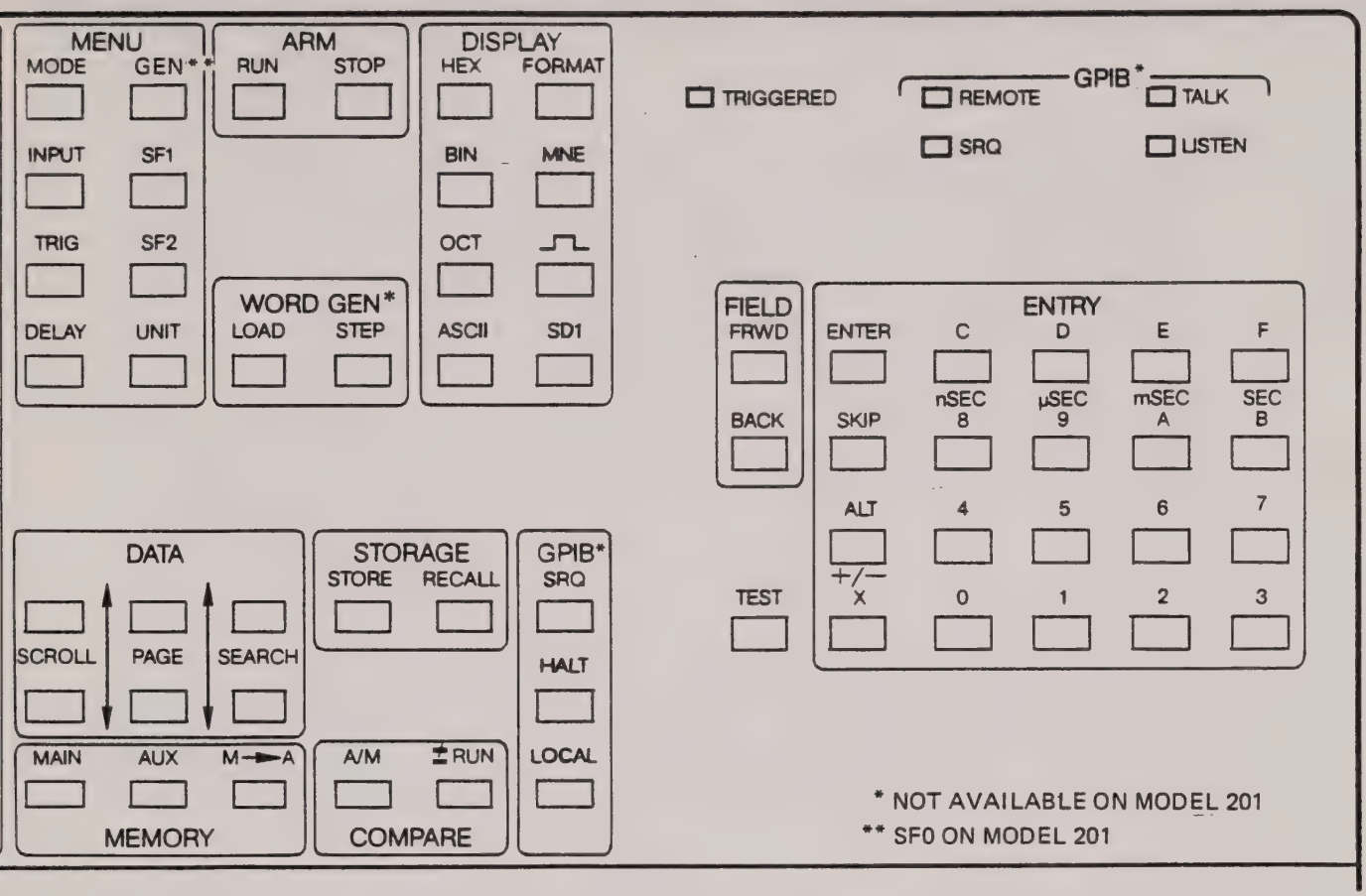

Figure 3.1 - Front Panel Keyboard and Indicators

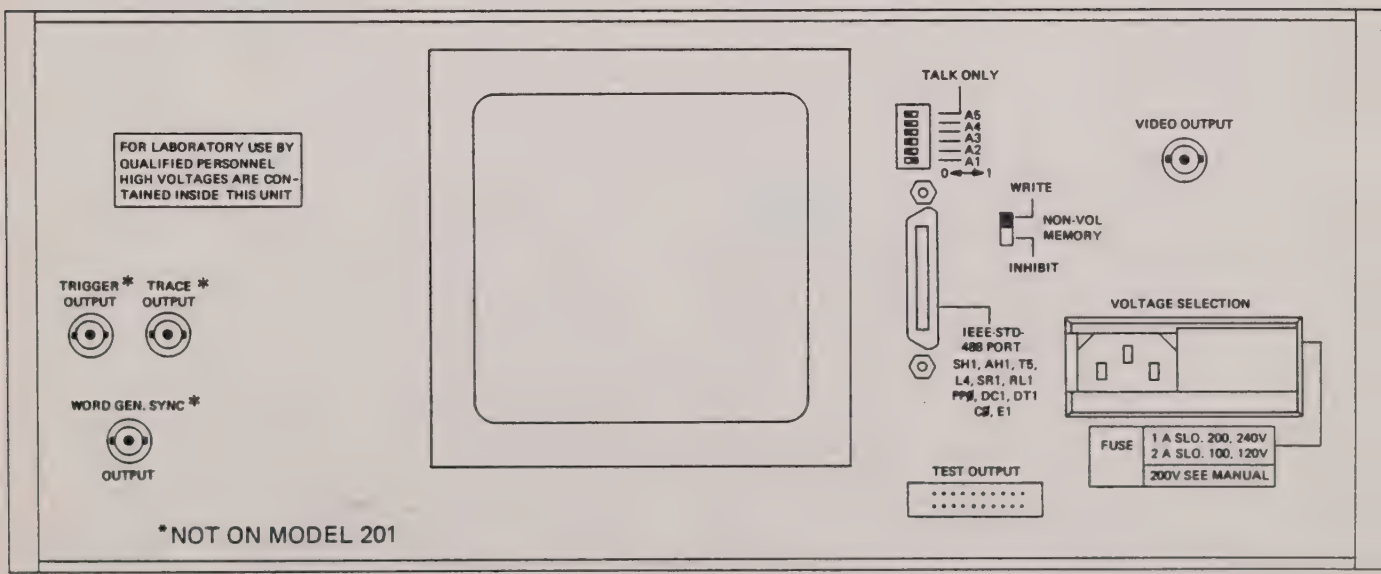

Figure 3.2 - Rear Panel

SECTION 3 KEYBOARD & INDICATOR DESCRIPTION

3.1 INTRODUCTION

3.1.1 Refer to Figures 3.1 and 3.2 when reading the following front and rear panel descriptions, respectively. This section provides a brief description of the front and rear panels, including all keys and indicators, of Series 200 state analyzers. Features not applicable to all members of the series are indicated by a special **NOTE** following the corresponding paragraph. Actual use of front panel (keyboard) buttons will be described in Section 4 to which the user is referred. The function of all rear panel features will be briefly described in this section and elaborated, if necessary, in a later section (e.g. the **GPIB** feature).

3.1.2 The following features are **not** present on the front panel of the 201: the **WORD GEN**erator and **GPIB** keyboard segments, **INPUT B** port and the **GEN**erator key within the **MENU** keyboard segment (replaced by **SF0**), and the 4-segment **GPIB** LED group.

3.2 FRONT PANEL DESCRIPTION

3.2.1 Series 200 analyzers have functionally-grouped front-panel keys highlighted by color-coded keyboard segments for easy location and logical use. Although four Entry Keys are dual-purpose, the instrument senses **all** front-panel controls as single function. There is no need for the operator, then, to make a manual or mental adjustment because of **true** multi-function keys.

NOTE

Instead of a four-color keyboard segment scheme like that of the 202/205, the 201 has a three-colored one in which the **ARM, COMPARE,** and **STORAGE** segments are rust-colored matching the **DATA** and **MEMORY** segments.

MENU KEY GROUP

- GOLD -

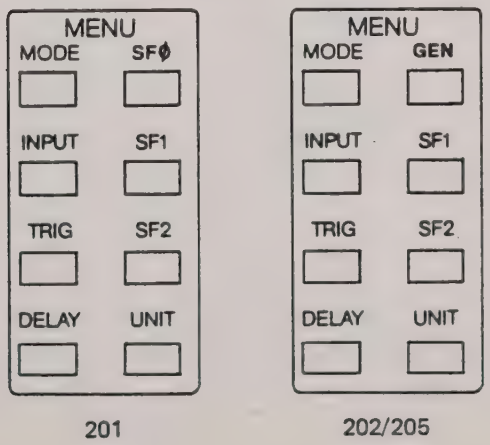

201 202/205

3.2.2 **MENU Keys** - call-up one of the four set-up menus, the word generator menu or the current unit configuration:

MODE ☐ Selects operating mode, trigger mode (normal/trace), pretrigger range, and interval measurement.

INPUT ☐ Selects clock-type, clock-source, internal clocking units/period, clock qualifier(s), trigger qualifier(s), input logic (polarity), and clock slope.

TRIG ☐ Selects arm/trigger words, masking, groupings and number bases.

DELAY ☐ Selects duration of arm/trigger delay(s), automatic add and restart word(s).

GEN ☐ Selects mode, length, number base and load method for the Word Generator on the 202 (if option-fitted) and 205.

UNIT ☐ Selects display of the analyzer's current software/hardware configuration plus the **GPIB** (if option-fitted on the 202) address.

DISPLAY/ENTRY/FIELD KEY GROUP

- BLUE -

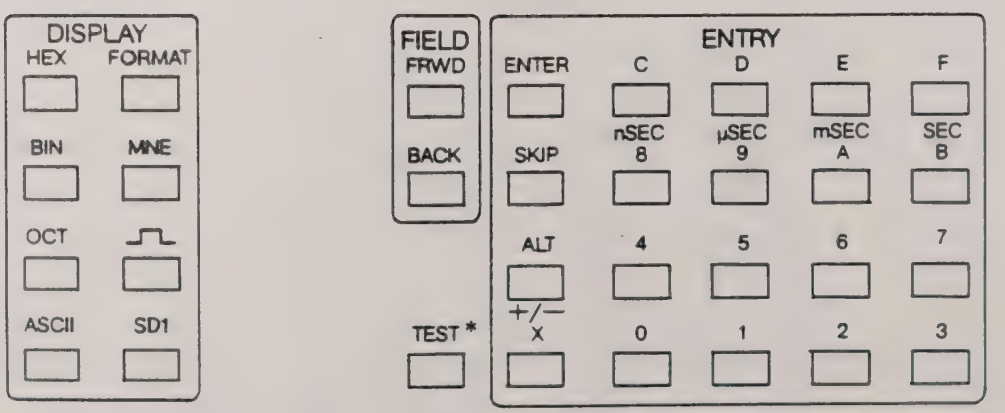

*Described under Paragraph 3.2.6

3.2.3 **Display/Entry/Field Keys** - divided into three front-panel segments, consisting of:

3.2.3.1 The **Display Keys** which change the display into:

HEX
☐ Hexadecimal Number Base

BIN
☐ Binary Number Base

OCT
☐ Octal Number Base

ASCII
☐ ASCII Format

Display keys also select one of the following three functions:

FORMAT
☐ Returning the displayed data to the trigger menu set-format

MNE
☐ Selecting a microprocessor disassembler or the one for the **GPIB**

⎍
☐ Selecting the waveform display for Input C

3.2.3.2 The **Entry Keys** which perform one of the following data/editing operations:

NOTE

Key operations followed by an asterisk (*) signify that automatic advancement of the cursor will occur if any of these keys are held down.

Selecting one of the data entry operations -

X
☐ "Don't Care" (*)

☐ "0 - F" hexadecimal entry (0 - 9, A - F) (*)

ALT
☐ Selecting the alternate to the displayed data when two field choices are available to the operator
+/−

SKIP
☐ Executing "forward" movement within a display field to edit a portion of it, or exiting one display field to enter the next one (except for **AL**Ternate field)(*)

ENTER
☐ Executing manual entry of data into a display field being edited (*)

3.2.3.3 The **Field Keys** which move the blinking cursor either:

FRWD

"Field Forward," (*) or

BACK

"Field Backward" (*) through the displayed menu

DATA/MEMORY KEY GROUP

- RUST -

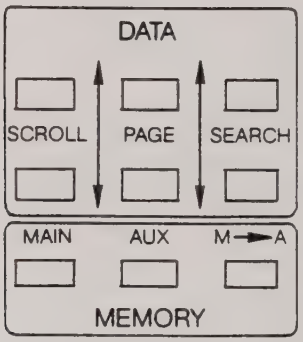

3.2.4 **Data/Memory Keys** - divided into two front-panel segments, consisting of:

3.2.4.1 The **Data Keys** which manipulate displayed data by:

SCROLL

"Scrolling" which moves the displayed data vertically, up or down, one line at a time in order to display other portions of the memory(*)

PAGE

"Paging" which moves the displayed data vertically, up or down, one 20-line by 50-character display at a time, in order to present other portions of the memory (*)

SEARCH

"Searching" which calls up a mini-menu, permitting entry of a word for forward or backward search of the full-data memory for the specifically entered word

3.2.4.2 The **Memory Keys** - which select one of the following memory modes:

MAIN
☐ Displays the main memory

AUX
☐ Displays the auxiliary memory

M→A ☐ Transfers the contents of the main memory into the auxiliary memory and, then, displays the auxiliary memory

ARM/WORD GEN/STORAGE/COMPARE/GPIB KEY GROUP

- GREEN -

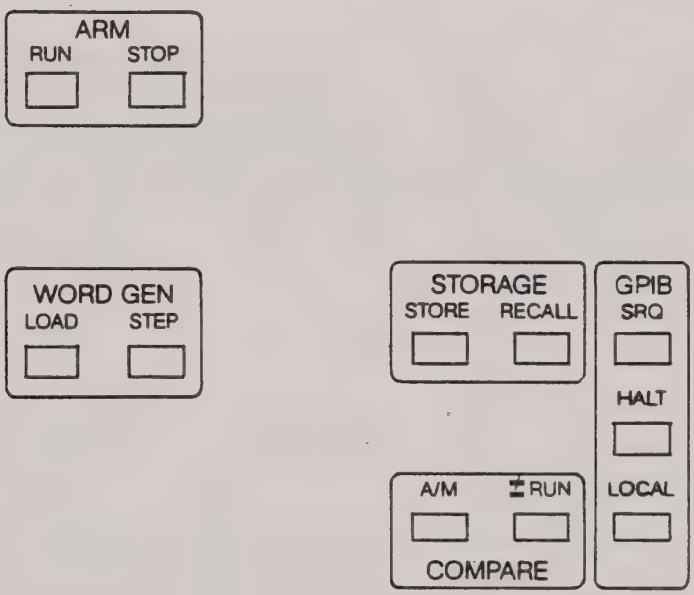

3.2.5 **Arm/Word Gen/Storage/Compare/GPIB Keys** - divided into five front-panel segments, consisting of:

3.2.5.1 The **Arm Keys** which select either:

RUN
☐ Initiates data acquisition and/or Word Generator output, or

STOP
☐ Terminates either operation described above

3.2.5.2 The **Word Generator Keys** which select either:

LOAD ☐ Displays the volatile memory of the Word Generator, either automatically-loaded or available for manual-loading, depending on the mode selected in menu, or

STEP ☐ Outputs (and moves) the Word Generator display one word at a time when running in the single step mode or outputs one cycle when running in the single cycle mode.

3.2.5.3 The **Storage Keys** which call-up a mini-menu, permitting either:

STORE ☐ Transfers the top displayed data line into the Trigger Menu as a new trigger word, or

STORE RECALL ☐ ☐ Stores into or recalls from the volatile memory a full menu-set, or

STORE RECALL ☐ ☐ Stores into or recalls from the non-volatile memory (if option-fitted on the 202) several sets of menus, Word Generator set-ups and/or auxiliary memory acquisitions.

3.2.5.4 The **Compare Keys** which initiate one of the following operations:

A/M ☐ Initiates a comparison of auxiliary to main memory, or

≠RUN ☐ Initiates a data collection when operating in either **STOP ON =** or **STOP ON ≠** mode.

3.2.5.5 The **GPIB Keys** which initiate one of the following three **GPIB** operations on either the 202 (option-fitted) or 205:

SRQ ☐ Requests service by the controller, thereby making available to the operator an extended memory capacity, or

HALT ☐ Terminates output when in the "Talk-Only" mode, or

LOCAL ☐ Transfer control to a local operator

3.2.6 TEST ☐ **Test Key** - used in conjunction with the hexadecimal entry keys (0-F) to select one of the various self-check capabilities.

LED INDICATORS

201

TRIGGERED

202/205

TRIGGERED

GPIB

REMOTE

TALK

SRQ

LISTEN

3.2.7 **LED Indicators** - As shown above, all Series 200 analyzers have a front-panel **LED** indicator designated **TRIGGERED** signifying when lit that all trigger conditions have been met. In addition, the 202 and 205 models have a **4-LED GPIB** Function Group (**REMOTE, SRQ, TALK,** and **LISTEN**) on the front panel.

3.2.8 **CRT Display** - All Series 200 analyzers are provided with a conventional 7-inch green phosphor screen for display of menus, memory, and operator interface comments. **CRT** display is 20 lines deep and 50 characters wide.

3.2.9 **Front Panel Inputs** - Refer to the full-page illustration facing Section 1 (vi) which shows the front-panel arrangement of Series 200 Input Ports. Note that all Inputs are located directly under the keyboard. On the 201, there are two Inputs (A and C); on the 202/205, there are three Inputs (A, B and C). Various interfacing probes are connected to the analyzer using these Input Ports. Each Input provides 16 data channels, two qualifiers (clock and trigger), a clock (except **INPUT B**, which uses the clock and qualifiers from **INPUT C**) and a ground. **INPUT C** provides the External Master Clock.

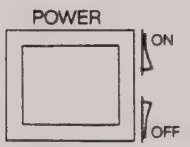

3.2.10 **Power Switch** - A rocker switch providing the **ON/OFF** control for Series 200 analyzers.

3.3 REAR PANEL DESCRIPTION

3.3.1 Refer to Figure 3.2 for the following rear-panel description.

3.3.2 **BNC Outputs** - there are four BNC outputs provided on the rear panel of the 202/205; one on the 201. The 202/205 have outputs for **TRACE, TRIGGER, VIDEO** and **WORD GEN**erator **SYN**Chronization, while the 201 model has a **VIDEO OUTPUT.** These outputs supply signals for the following functions:

(A) **TRACE** pulse output for expanding memory width, trigger width and, especially, trigger nesting as well as for a μP Interrupt in expanded test situations.

(B) **TRIGGER** pulse output for expanding memory width and trigger width as well as a μP Interrupt in expanded test situations.

(C) **WORD GEN**erator **SYN**Chronization pulse for signifying every first 16-bit word occurring in a data output from the Word Generator.

(D) **VIDEO (OUTPUT)** pulse for driving the 75Ω video input of an external monitor or providing a direct connection to a video printer.

3.3.3 **Test Output** - available on all Series 200 analyzers this connector permits attachment of a probe test cable enabling the testing of probes and the input system for correct performance.

3.3.4 **Non-Volatile Memory Switch** - standard on the 205 and optional on the 202, this control has two operating positions. One position permits the Non-Vol. Memory to be written into (Write); and the other prevents Non-Vol. Memory from being written into (Inhibit). With every Non-Vol. Memory comes a special rear-panel plate which either permits the switch to be locked in the inhibit position or to operate in both the write and inhibit positions.

3.3.5 **GPIB** - standard on the 205 and optional on the 202, this rear-panel feature provides the GPIB-fitted analyzer with a GPIB interface connector and a DIP switch. The switch permits both the setting of the analyzer's GPIB address and selecting the **TALK-ONLY** mode.

3.3.6 **Power Input** - this combination feature contains the line voltage selector card, the input connector, and fuse.

SECTION 4 KEYBOARD OPERATION & DATA DISPLAY

4.1 INTRODUCTION

4.1.1 This section presents information relating the operation of front-panel keyboard controls to data display on Series 200 analyzers. Each keyboard segment is described, except those for the Word Generator and GPIB which are covered in Sections 6 and 7, respectively. When necessary, photographs from typical Series 200 CRT-displays are used in order to better show the operator how a specific key or keyboard segment produces or changes data display. Material in this section is considered **basic** for understanding data entry, editing and manipulation using Series 200 instruments. Information in Section 4 should, therefore, be mastered before proceeding with the detailed menu descriptions found in Section 5.

4.1.2 Occasionally, however, some material in this section does relate to menu operation. For example, paragraph 4.2 briefly describes the function of the blinking cursor. Such information is minimal and has been incorporated in Section 4 because it refers more logically to understanding basic data display rather than menu operation. Basic keyboard operations described in Section 4 will generally **not** be repeated in later sections; the operator is advised to refer back to this section whenever necessary.

4.2 BLINKING CURSOR

4.2.1 Refer to Figure 4.1. The user of a Series 200 analyzer is continually alerted to which display-field is currently available for data entry, selection and manipulation by means of a **blinking reverse-video cursor.** This field-locating function of the cursor is its **only** use. After data entry, selection or manipulation is completed, the data is highlighted in an reverse-video display; the cursor then automatically relocates **forward** to the next field in the interactive menu, again serving as an indicator for data entry or selection. The blinking cursor can also be relocated manually, forward or backward, from one field to the next by pressing either the **FRWD** or **BACK**ward key in the **FIELD** segment or using the **SKIP** key (except when in an **ALT**ernate field).

Figure 4.1 - Two Displays Showing Blinking Cursor Before Field Selection & Highlighted Field After Selection

4.3 FIELD KEYS

4.3.1 To relocate the cursor forward or backward through menu, press either the **FIELD FRWD** or **BACK**ward key. A single maneuver moves the cursor to an adjacent field; keeping the key depressed permits automatic advancement within the menu in either direction. Although the **SKIP** key allows movement **through** one field into the next (except when in an **ALT**ernate field), the **FIELD** keys advance directly **from** one field to the next.

4.4 ENTRY KEYS

4.4.1 To enter hexadecimal data in bit-form within an open display-field, simply press the corresponding keyboard buttons (**A-F, 0-9,** or **X** for "Don't Care") in the **ENTRY** segment. Right-justify the data entry, if necessary, using the **ENTER** button. (This convenient way of right-justification is especially useful in expediting the entry of small numbers into large display-fields.) Manual right-justificaion can also be achieved by entering 0's until the number of empty field spaces corresponds exactly to the number of digits requiring entry, then filling these empty spaces using the required hexadecimal **ENTRY** key(s). Shown below are three typical examples of field entry operations:

(A) **New Number Entry** - e.g. to enter "150," simply press the "1," "5," and "0" decimal keys and right-justify, if necessary, using the **ENTER** button.

(B) **Partial Number Change (One Digit)** - e.g. to change "150" to "250," press the "2" decimal key and move through the rest of the field using the **SKIP** key. There is no need to right-justify using the **ENTER** button.

(C) **Complete Number Change (Three Digits to One Digit)** - e.g. to change "250" to "1," press the "1" decimal key and right-justify using the **ENTER** button.

4.4.2 Refer to Figure 4.2 showing a numerical selection in an entry field.

Figure 4.2 - Display Showing Completion of a Numerical Field Selection

4.4.3 To rapidly advance to a specific data location within a display field for data entry-editing, press the **SKIP** key to move the cursor to the required location. Automatic advancement will occur if the **SKIP** button is held-down. After data has been entered or selected using the **SKIP** button, the entry will be highlighted in reverse-video and the analyzer will "remember" this "new" information and transfer it into any other menu-display for which the data applies. Now, proceed to the next display field using the **SKIP** or **FIELD FRWD** key.

4.4.4 Refer to Figure 4.3. To make a selection between two possible data choices in a display field, press the **ALT**ernate button until the desired field choice is selected and highlighted. After using the **ALT**ernate button, the cursor will automatically advance to the next field for selection.

Figure 4.3 - Display Showing an Alternate Field Choice for "YES."
(Note the Blinking Cursor Locating the Field for Selection.)

4.4.5 Refer to Figure 4.4. To use the **X ("Don't Care")** function, press the appropriate **FIELD** segment key and/or **SKIP** button to move to the desired display location; then press the **X** key. Holding this key down will permit continuous entry of **X** within an open display-field.

Figure 4.4 - Display Showing "X" (Don't Care) After Entry in the Trigger Qualifier Field (Probe B)

4.4.6 Refer to Figure 4.5. Use hexadecimal **ENTRY** buttons **B, E,** and **0** to execute rapid **Data Location** within the main memory. The **B, E** and **0** keys directly move displayed data to the beginning, end or trigger position of the memory, respectively. Also, press the required decimal key and **SKIP** button to relocate directly to a **Specific Line Numbered** within a tabulated data display.

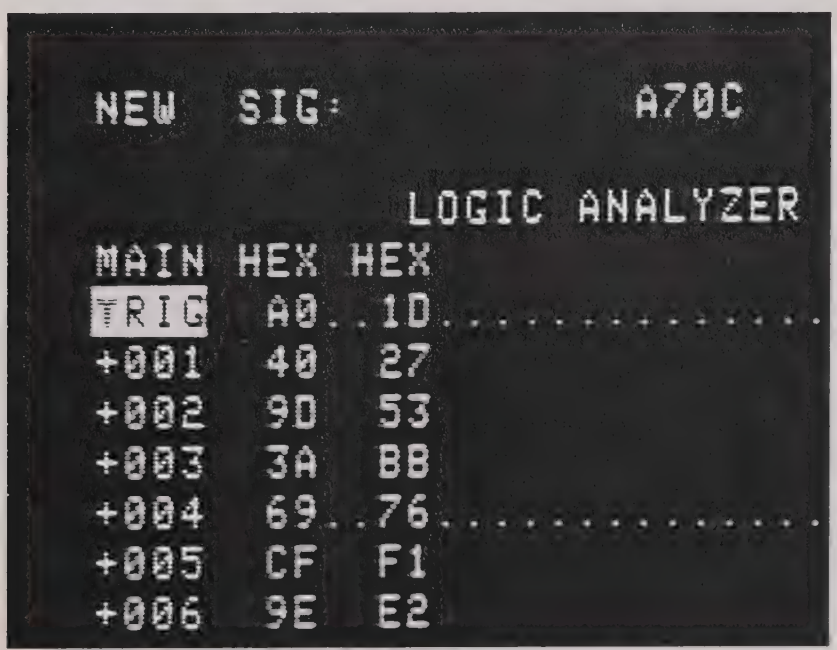

Figure 4.5 - Display Showing Numbered Information Lines of the Main Memory

4.4.7 Use hexadecimal **ENTRY** keys **C, D, E** and **F** for selecting **INT CLK UNITS** (Internal Clock Units) of **nSEC, µSEC, mSEC** and **SEC**, respectively, during **INPUT MENU** Set-up. Refer as required to the subsection on **INPUT MENU** in Section 5.

4.5 DISPLAY KEYS

4.5.1 Refer to Figure 4.6 showing typical data display formats using conventional number bases.

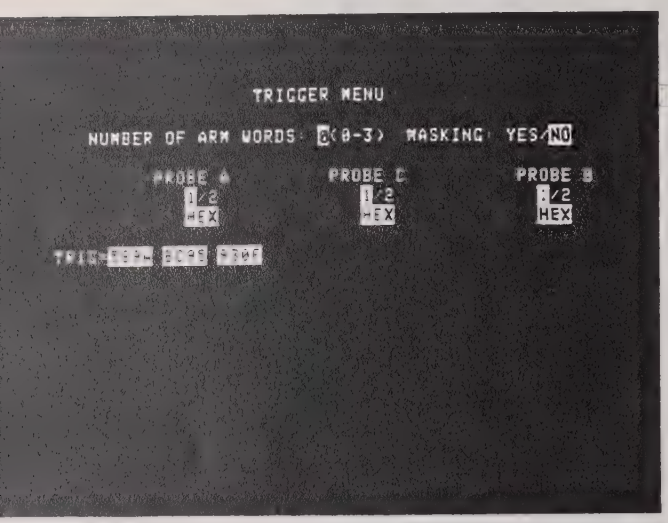

(A)

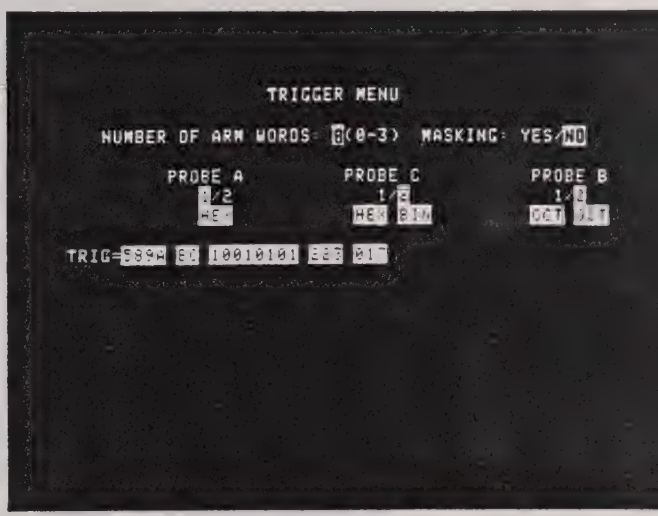

(B)

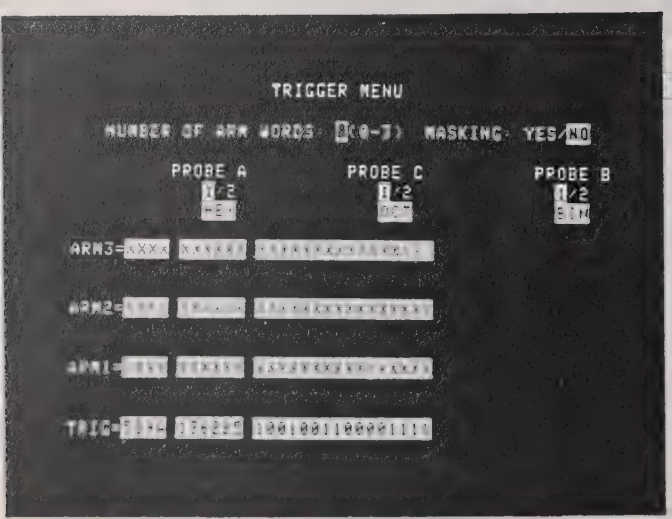

(C)

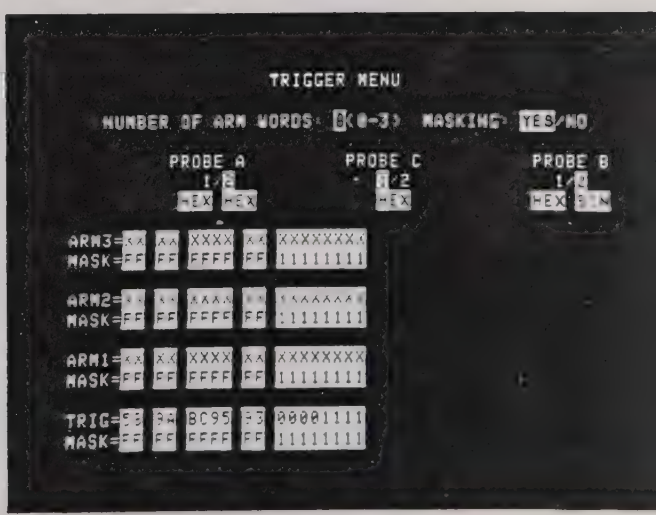

(D)

Figure 4.6 - Four Examples of Trigger Menu Displays Using Various Bases with Probe Groupings

4.5.2 When in the word set-up fields of the **TRIGGER MENU**, display of 8-bit data groups in **HEX**adecimal, **BIN**ary, and **OCT**al bases as well as **ASCII** format requires pressing the corresponding **DISPLAY** key. Refer to Section 5 for additional information regarding the **TRIGGER MENU**.

NOTE

Remember, use the number base/format keys any time it is necessary to change the full **data** (not menu) display to one having a different number base or an ASCII format.

4.5.3 Press the **FORMAT** button when it is necessary to return displayed data to the trigger menu set-format.

4.5.4 Press the **MNE** key any time it is necessary to display 8-bit μP (machine) data in mnemonic format (depending on the specific μP Disassembler option in use). Each dedicated Disassembler option for an 8-bit μP-chip will also provide the appropriate Adaptor.

4.5.5 Refer to Figure 4.7. Press the $\sqcap$ key anytime it is necessary to display the **Waveform Mode** allowing one to view 8 bits of input data at a time (16 bits total) from Probe C channel. By using the internal clock at speeds of 10 MHz, the operator has a slow-rate asynchronous timing capability that is very useful in scanning incoming low-speed data and displaying it in a Waveform configuration. Using Series 200 analyzers, Waveform resolutions of several hours to 100 nSec are possible. The Waveform display is provided with a cursor indicating the value of the word at the cursor location. Also, data can be readily converted back to any one of the tabular data formats simply by pressing the correct **MEMORY** key.

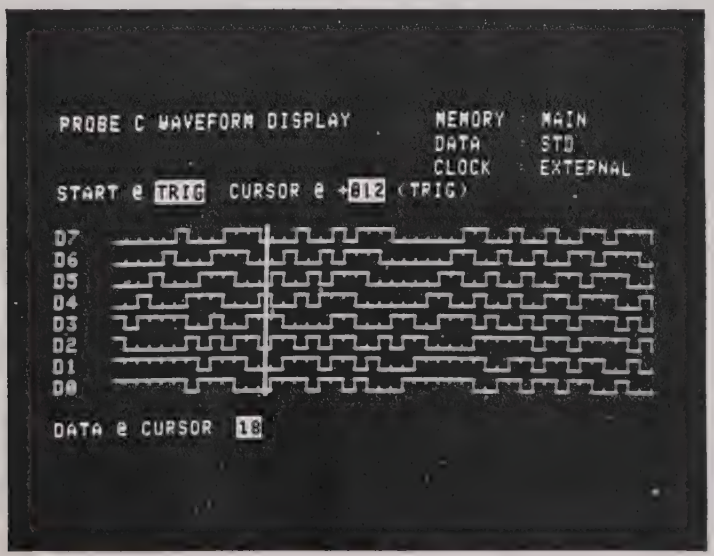

Figure 4.7 - Display Showing 8-Line Waveform Using Single Probe

4.5.6 The last **DISPLAY** key, **SD1**, is inoperative at present, allowing for future expansion.

4.6 DATA KEYS

4.6.1 Refer to Figure 4.8. To move tabular display data forward or backward, one line at a time, press the appropriate **SCROLL** key. Holding this key down will continuously move the numbered data lines until the desired line is displayed for examination.

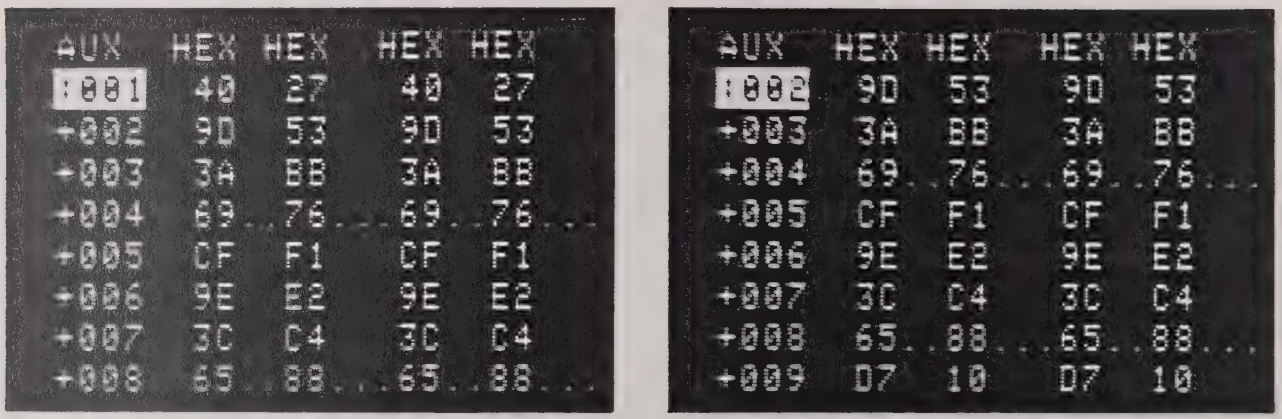

Figure 4.8 - Display Showing Scrolling Function

4.6.2 Refer to Figure 4.9. To move tabular display data forward or backward, one 20-line display at a time, press the appropriate **PAGE** key. Holding this key down will continuously move the data segments.

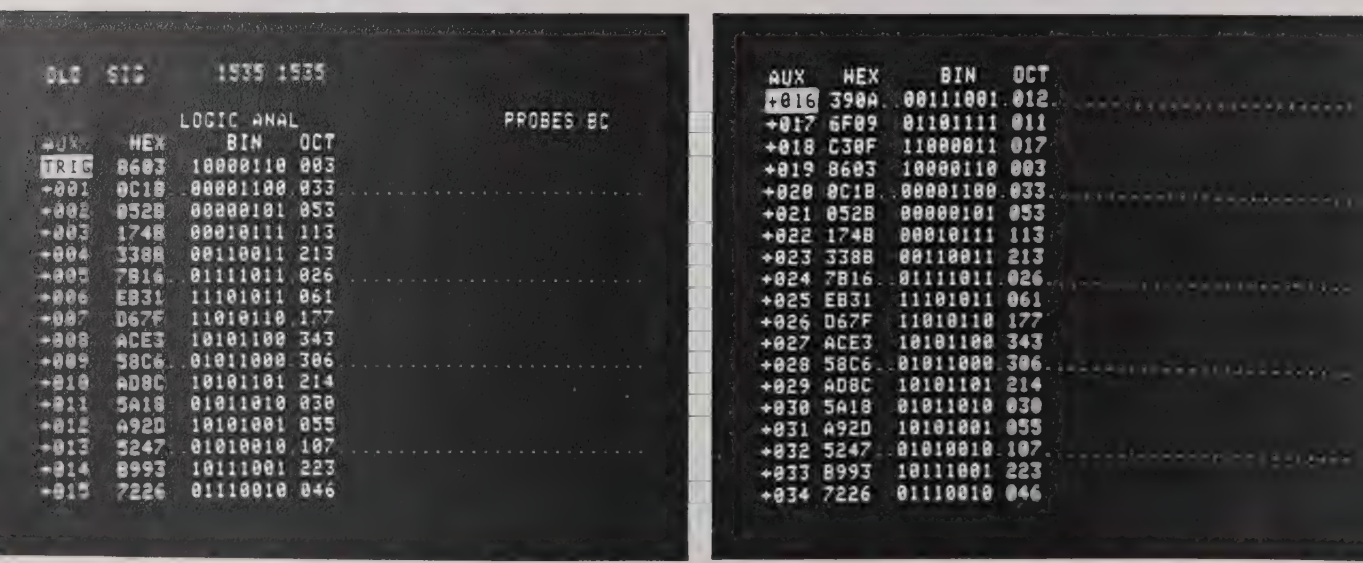

Figure 4.9 - Display Showing Paging Function

4.6.3 Refer to Figure 4.10. To initiate a search through full memory, either forward or backward, for a word or word-portion, press the appropriate **SEARCH** key. This will call-up a mini-menu on the four bottom lines. After defining a single search word or word-portion, complete with any "Don't Care" conditions, enter either the complete or partial word into the mini-menu. (The Search operation is conducted using this mini-menu technique rather than by any scroll/page procedure.) After pressing the desired **SEARCH** key again, searching proceeds rapidly forward or backward through memory for either the word or word-portion. Typically, the display would move to the first occurrence of the search word; then, highlight all other occurrences in memory by an asterisk (*). The **SEARCH** procedure can save the operator significant time when data must be evaluated rapidly so that a new data collection can be started. If, on the other hand, the search word or word-portion is not located in memory, **NO SEARCH WORD FOUND** will be displayed on the screen, thereby advising the operator.

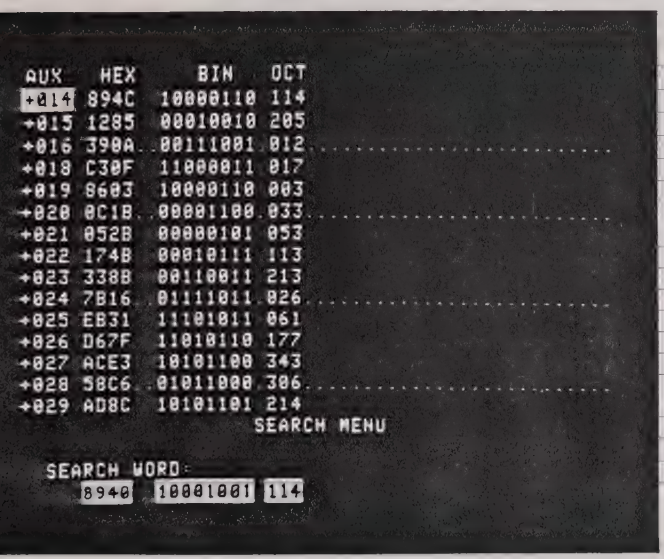

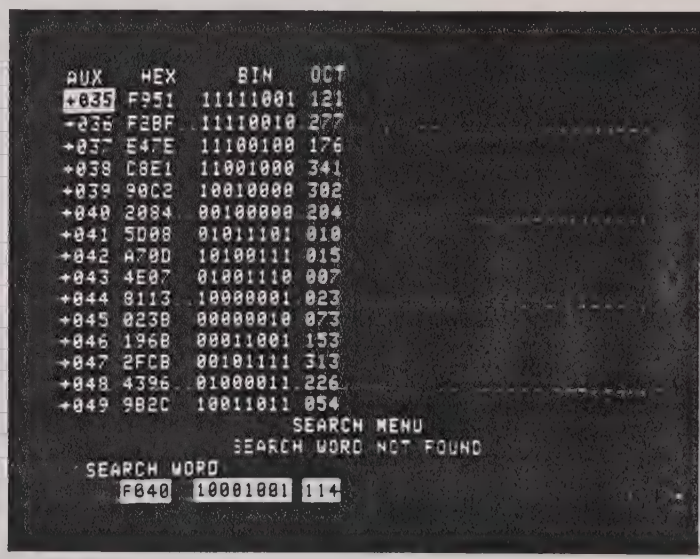

Figure 4.10 - Displays Showing "Search Word" Found and Not Found in Auxiliary Memory

4.7 MEMORY KEYS

4.7.1 There are three control keys in the **MEMORY** segment: the **MAIN** and **AUX**iliary buttons select the main and an auxiliary memory for display, respectively; the **M → A** requests loading the **MAIN** memory information into the **AUX**iliary memory. Because these three **MEMORY** keys are often used conjointly with the two **COMPARE** keys, **A/M** and **≠ RUN**, the **MEMORY** and **COMPARE** segments are only defined in this section. Operation of both segments, however, is described in greater detail in Section 5 to which the user is referred.

4.8 COMPARE KEYS

4.8.1 There are two **COMPARE** buttons in this keyboard segment. The **A/M** initiates a comparison of **AUX**iliary to **MAIN** memory; the **≠ RUN** initiates data acquisition in either the **STOP-ON-NOT-EQUALS** or **STOP-ON-EQUALS** mode. Refer to Section 5 as required.

4.9 STORAGE KEYS

4.9.1 Refer to Figure 4.11. Series 200 analyzers are capable of fast, flexible, and deep-storage characteristics. Press the **STORE** button to call-up a mini-menu for the following three functions:

(A) **Direct Trigger** (all Series 200 analyzers) which transfers the top line of display data directly into the **TRIGGER MENU** as a **new** Trigger Word to facilitate further data capture.

(B) **Volatile Memory** (all Series 200 analyzers) which is available for storage of a full menu-set for recall anytime the operator needs to return the analyzer to some prior condition or a reference menu set-up.

(C) **Non-Volatile Memory** (standard on 205; optional on 202) which, upon selection, calls-up a second mini-menu, for extensive storage of auxiliary data, multiple menu-sets, and Word Generator set-ups. After Non-Vol. selection, a Memory Directory shows the areas available for storage. Storage capacity for auxiliary data, menus, and Word Generator Set-ups is 1500, 500, and 500 bytes, respectively. (Each area is 500 bytes - see Figure 4.12.)

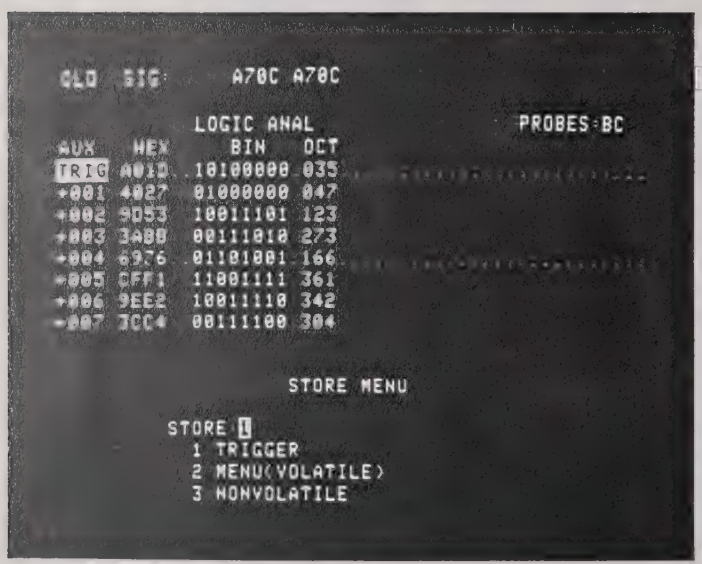

Figure 4.11 - Display of Store Menu Before and After Data Storage Procedure

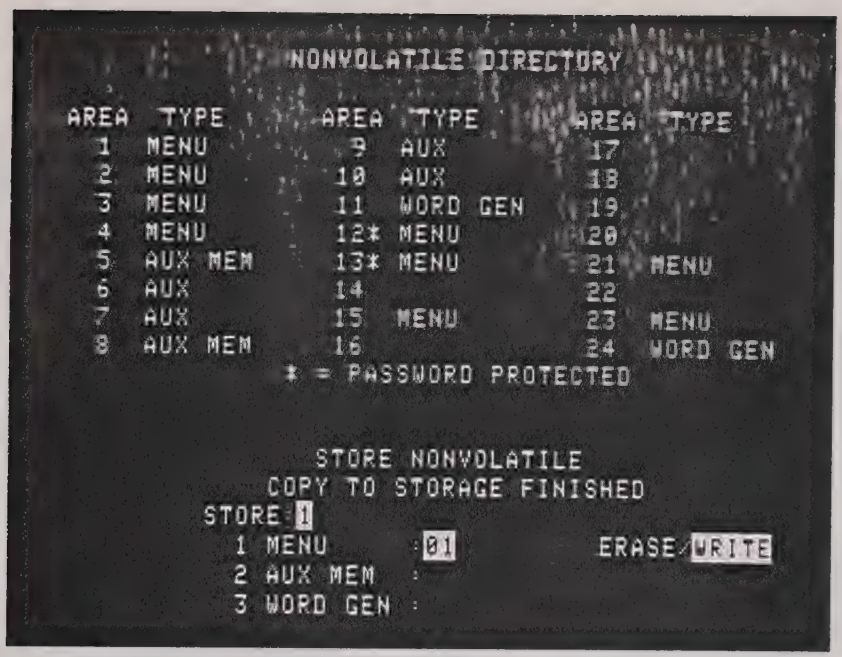

Figure 4.12 - Display of Non-Volatile Memory Directory

4.9.2.1 At the top of the mini-menu, various operator advisories are displayed, assisting the operator in the use of the Non-Volatile Memory function, including:

(A) **COPY TO STORAGE FINISHED:** indicating that Data Storage or Recall is completed.

(B) **INVALID ENTRY:** indicating that an error has been entered from the keyboard.

4.9.2.2 In addition to using the mini-menu of the Non-Volatile Memory for Data Storage, it can also be employed for erasing from available memory segments.

4.9.2.3 Finally, use the mini-menu to enter the two-digit number **PASSWORD** into memory. This **PASSWORD** (1) provides the operator with a "personalized" identifier for memory access and (2) prevents another operator from accidentally overwriting or erasing stored information. This code word is part of a complete memory protection feature for the Non-Volatile Memory which also includes two in-board switches on the plug-in Non-Vol. PCB. One switch permits removal of the password requirement itself; the second provides a keyboard "lock" (inhibit) which prevents writing into memory. Also, after writing into the Non-Volatile Memory is completed, a check is performed to ensure storage of correct information. (Write times for Non-Vol. Storage approximate 7, 13, and 40 seconds for the Menus, Word Generator Data and Auxiliary Memory, respectively.)

4.9.3 Press the **RECALL** key to recall information from either Volatile or Non-Volatile Memory storage. (Recall Time is one second or less.) Refer to Figure 4.13.

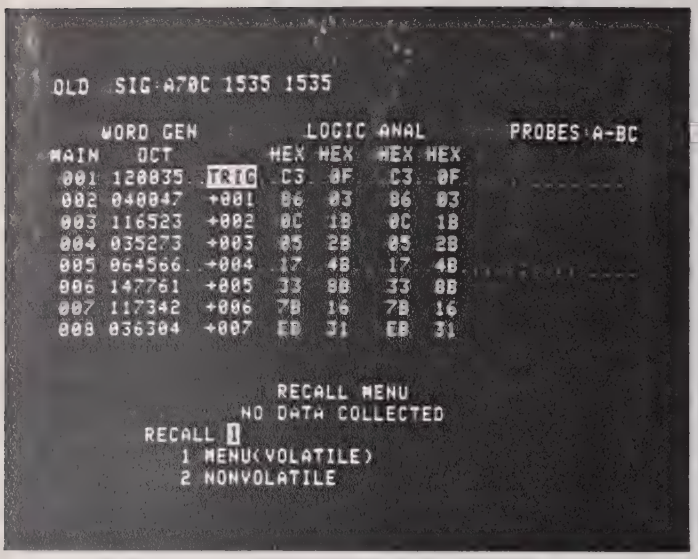

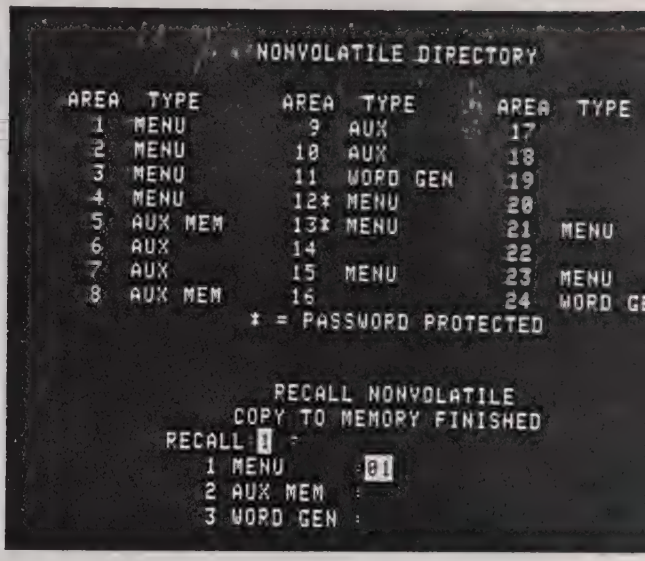

Figure 4.13 - Displays Showing Recall Menu (A) and Recall of Non-Volatile Memory Directory (B)

4.10 ARM KEYS

4.10.1 Press the **RUN** key to initiate data collection when the instrument is being used as an analyzer and/or to output data when it is being used as a Word Generator. Use the **STOP** key to terminate either **RUN** operation just described. The two **ARM** keys will be described further in Sections 5 and 6.

4.11 MENU KEYS

4.11.1 Press the appropriate **MENU** key in order to select the required Set-up Menu (**MODE, INPUT, TRIG,** or **DELAY**), the Word **GEN** Menu, or the Configuration (**UNIT**) Menu. The **SF0, SF1,** and **SF2** (201 has all three) keys are inoperative.

4.12 TEST KEY/SELF-CHECK MENU

4.12.1 Turn the logic analyzer on, observing the "RAM TEST COMPLETED" and "ROM TEST COMPLETED" advisory, followed by the Mode Menu display with a blinking cursor over the number "1," next to "OPERATING MODE."

4.12.2 **Test Key** - refer to Figure 4.14 below which shows the **TEST SELECTION** menu display. Press the **TEST** key to call up this **TEST SELECTION** menu. Then to initiate a specific Self-Check listed in the menu, simply press the corresponding **ENTRY** key (1-5).

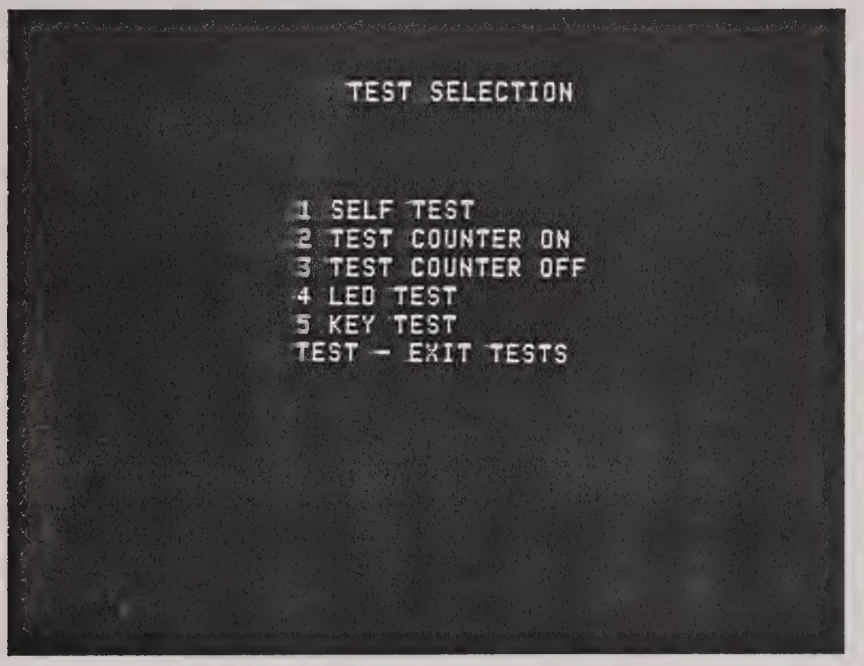

Figure 4.14 - Test Selection Menu Display

4.12.3 Self-Check Tests

4.12.3.1 SELF TEST - before describing the test itself, the correct pretest setup and procedure will be briefly outlined.

4.12.3.1.1 After connecting the logic analyzer to an AC power outlet with the correct line voltage, connect each standard probe to a front-panel input channel on the analyzer.

NOTE

In checking the integrity of variable threshold probes, ensure that the "TTL" trigger-level position has been selected before performing any Self-Check procedure.

4.12.3.1.2 Refer to Figure 4.15 as well as Figures 3.1 and 3.2 in completing this step. Connect the 4-way Interconnect Cable (Racal-Dana P/N 601088) between the standard probe inputs and the 20-pin test output on the rear panel of the analyzer. The only input connections possible for testing are the following: Input A + Input B + Input C, Input A + Input C, and Input C alone.

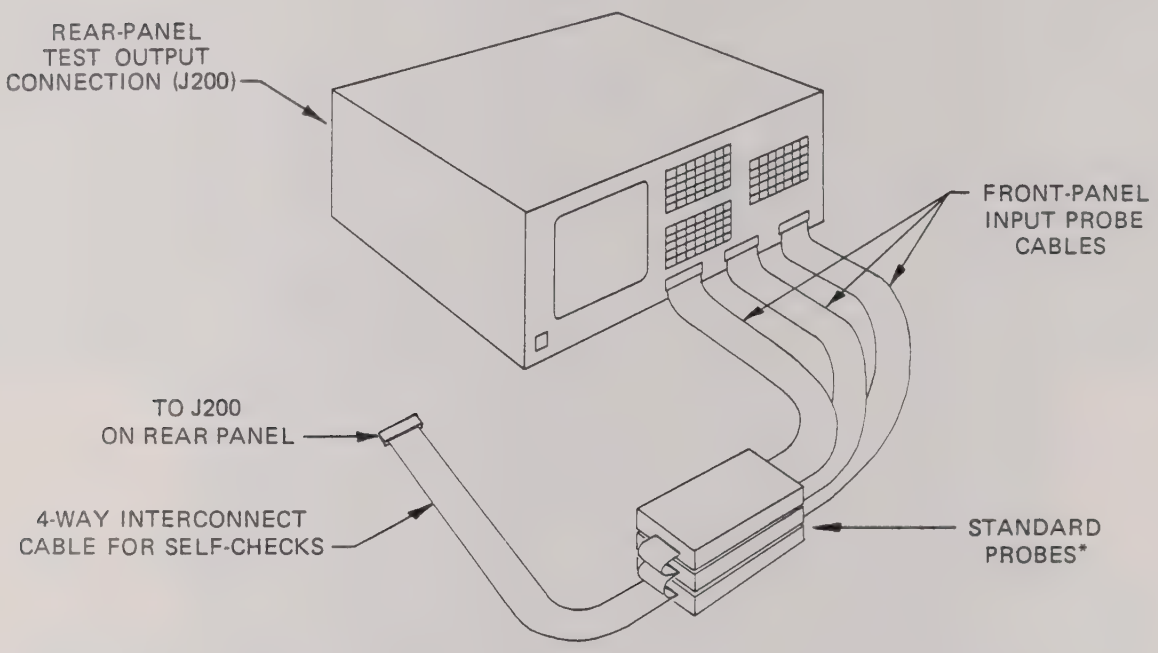

* ONLY 2 FIXED THRESHOLD PROBES REQUIRED ON THE MODEL 201.

Figure 4.15 - Self-Test Probe and 4-Way Interconnect Cable

4.12.3.1.3 Now press the "1" key to activate this test which provides the user with a general hardware check of the analyzer. The displayed test result is a go/no go advisory on screen indicating either "SELF TEST PASSED" or "SELF TEST FAILED." Two other operator advisories that can be displayed are "CLOCK ERROR" and "TIMER ERROR" which are specific self-test errors.

4.12.3.2 **TEST COUNTER ON** - press the "2" key to initiate this feature which enables two internal digital counters to continuously count, in binary, from 0 to 255 with wrap-around. The counters are clocked using the analyzer's internal clock. Refer to Figure 3.2 which shows the location of the rear-panel test output.

4.12.3.3 **TEST COUNTER OFF** - press the "3" key to turn off the test counter.

4.12.3.4 **LED TEST** - press the "4" key to activate this test. This check permits verification that all front-panel status LEDs (5 on the 202/205; 1 on the 201) sequentially illuminate. Any key stops the test at the end of the sequence. The test sequence is **SRQ, LISTEN, TALK, REMOTE, TRIGGERED.**

4.12.3.5 **KEY TEST** - for performance of this test, refer to Figure 4.16 which shows the front-panel Key Designator Code. Each code designator comprises the row and column location assigned to that key. To initiate the test, press the "5" key.

Then check that the CRT screen displays the correct Key Designator Code for every key entry. Press the **TEST** key to stop the key test.

4.12.3.6 **TEST-EXIT TESTS** - pressing the **TEST** key permits exiting of the **TEST SELECTION** menu, returning the analyzer to the Mode Menu.

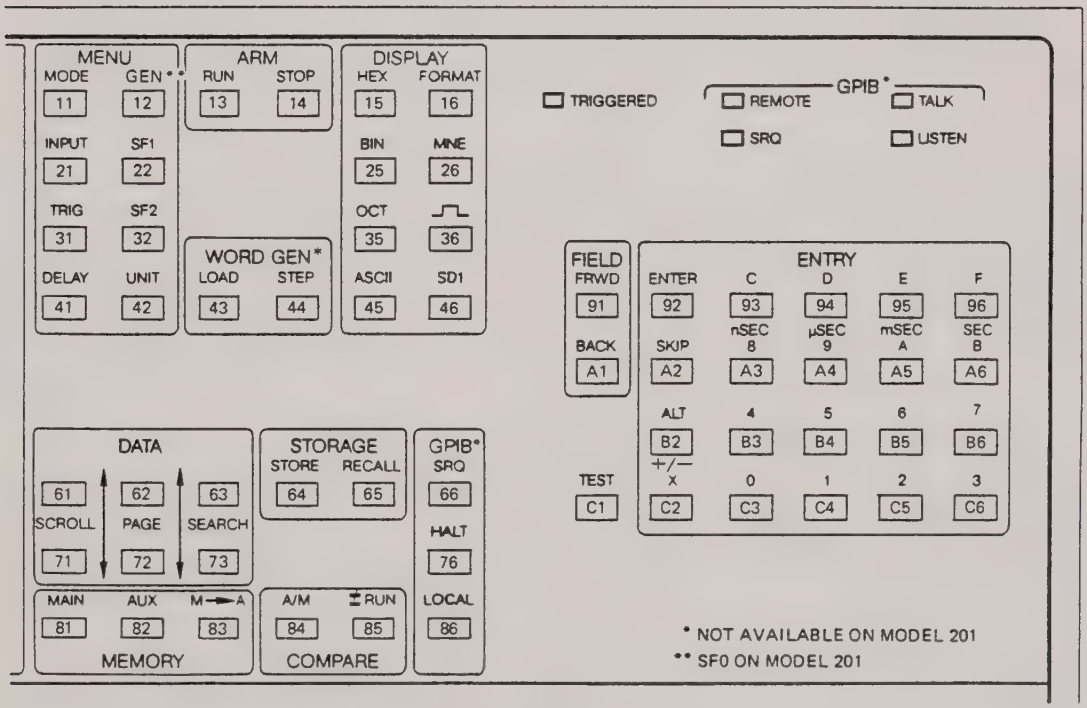

Figure 4.16 - Front Panel Key Designator Code

SECTION 5 MENU DESCRIPTION & OPERATION

5.1 INTRODUCTION

5.1.1 **Menu Definition** - one of the six CRT-displays (five on the 201) available on Series 200 analyzers which are called-up by the operator for data selection, entry/editing and evaluation using the front-panel keyboard controls.

5.1.2 Menus that are standard on all Series 200 state analyzers include the **MODE, INPUT, TRIG**ger and **DELAY** Set-up Menus. A Word **GEN**erator Menu is standard on the 205, optional on the 202, and unavailable on the 201. A **UNIT** (Configuration) Menu is provided on all Series 200 instruments.

NOTE

Some references use the term "Menu" to mean any ordinary Trace Display (such as a Trace List) generated by a logic analyzer. However, in this manual, "Menu" is reserved only for Set-up, Word Generator, and Unit Menus. Other displays are termed "Traces."

5.1.3 Except for the Unit Menu, all other menus are **Interactive** which means that the operator is systematically guided through each menu by making a series of selections, entries, and manipulations from a displayed sequence of qualifying field selections. These **Interactive** Menus display operator advisories only when necessary, providing "error-messages" indicating either that an unacceptable entry has been made or alerting the operator that the entry is incorrect in its present form. The current field for data entry is highlighted for the operator by means of a blinking cursor.

5.1.4 Series 200 analyzers, then, combine both simplicity of operation, necessary for the first-time as well as the occasional user, and extensive performance features, required by the skilled operator making sophisticated measurements. (Integration of these important user-capabilities was achieved by combining a simplified set of interactive menus with "friendly" advisories, single-function keys, and color-coded keyboard segments.)

5.1.5 Each of the four Set-up Menus, Word Generator Menu, and Unit Menu is labelled at the top of its display.

5.1.6 After power-up, the first display observed by the operator should be: **RAM TEST COMPLETE.** This advisory indicates that the Random-Access Memory of the analyzer's uP has successfully completed a "nondestructive" test. Following a brief delay for CRT-warmup, the **MODE MENU** is displayed in the default (initial set-up) mode. The analyzer is now ready for use.

5.1.7 The following subsections describe the organization and function of each menu in the Series 200 family. Each menu subsection is introduced by a separate overview page providing a basic review of that menu's performance capabilities.

MODE MENU

- Permits selection of one of the four **OPERATING MODE**s.
- Permits selection of a **PAUSE** parameter when the **AUTO ARM** mode is specified. A **PAUSE** of up to 999 seconds may be selected.
- Permits selection of **WORD DEPTH** parameter (between 1 and 250) in either the **STOP ON =** or **STOP ON ≠ MODES** using the **COMPARE** function.
- Permits selection between **NORMAL** and **TRACE** in the **TRIGGER MODE.** If **NORMAL** is selected, the number of **PRETRIGGER** words can be specified. If **TRACE** is selected, the **POST TRACE** and its number of **STATES** can be specified.
- Permits selection of a **TIMED INTERVAL** using either **CLOCKS** or **TIME.** (For either choice, the operator is advised to "SET IN INPUT MENU."

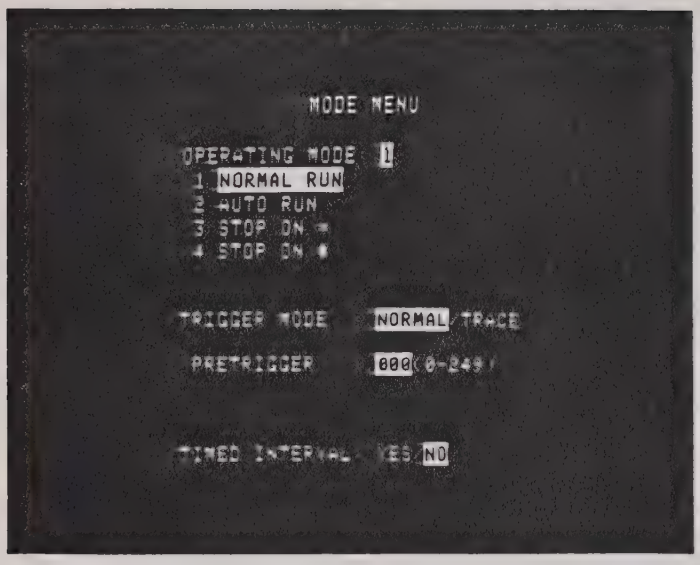

Figure 5.1 - Mode Menu in Default Display

5.2 INTRODUCTION - MODE MENU

5.2.1 Refer to Figure 5.1 above for the following description of the **MODE MENU**. It shows the entire **MODE MENU** displayed in **OPERATING MODE 1** as indicated by the blinking cursor. In **OPERATING MODE 1, NORMAL RUN**ning conditions prevail.

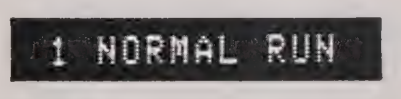

5.2.2 **NORMAL RUN**ning signifies a single collection of data according to menu set-up for the purpose of state analysis. There is no automatic re-arming for a second trigger, nor is there any "extended" function such as Stop-on-Not-Equals or Stop-on-Equals. Up to three arming words may be used to qualify the trigger event. (Arming words that are used must be recognized by the analyzer in the **same** sequence in which they were entered into memory before triggering will occur.) After satisfactory power-up, it is the **NORMAL RUN**ning mode that is displayed. After selection of the operating mode, the cursor will relocate to the next field for choice.

5.2.2.1 This display field provides a choice between **NORMAL** and **TRACE** modes by either pressing the **ALT**ernate key for **TRACE** or proceeding directly to **PRETRIGGER** using the **FIELD FRWD** key.

5.2.2.2 Unlike **ARM**ing words which are qualifiers that **must** be recognized in their specified sequence before triggering will occur, **PRETRIGGER** words simply specify the maximum number of "state words" that can be sampled by the analyzer before trigger occurs. The **PRETRIGGER** range extends from 0 to 249 words. This range would permit an accumulation of 250 words in memory after all trigger conditions have been met. In addition, all Series 200 analyzers provide a flexible **PRETRIGGER** feature permitting the user to place the Trigger Word anywhere in memory after data-capture. With this facility, the operator can then view information collected either before or after triggering.

5.2.2.3 When the **TRACE** trigger mode is selected, the **POST TRACE** field is made available.

5.2.2.4 The **POST TRACE** field presents the operator with a **YES/NO** choice. If YES is selected, the **MODE MENU** next prompts the operator to further qualify the **POST TRACE** selection by specifying the number of **STATES** using the appropriate decimal key from the **ENTRY** field. The **POST TRACE** offers the operator an extended data capture capability of 16 additional words. Regardless of whether **NORMAL TRIGGER/PRETRIGGER** or **TRACE/POST TRACE** is selected, the menu next displays **TIMED INTERVAL.**

5.2.2.5 The **TIMED INTERVAL** field signifies the period between the occurrence of the last **ARM**ing word and data-capture. This field choice is made using the **ALT**ernate key. If **YES** is specified, the operator is further requested to select between **CLOCKS** and **TIME** parameters for the **MEASURE** of **TIMED INTERVAL.**

5.2.2.6 Regardless of whether **CLOCKS** or **TIME** is selected for **MEASURE**, the operator should proceed next to the **INPUT MENU** to specify any required clocking or timing information. Refer to the subsection of the **INPUT MENU** for further information.

5.2.3 **OPERATING MODE 2** permits the operator to select **AUTO**matic **RUN**ning of the analyzer along with a **PAUSE** specification ranging from 0 to 999 seconds. This operating mode, in contrast to mode 1, allows automatic re-arming and multiple triggering operation.

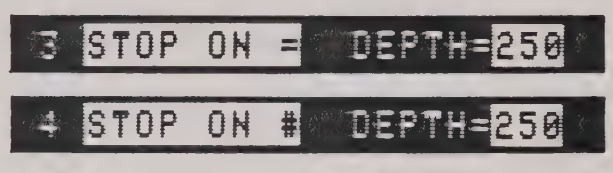

5.2.4 **OPERATING MODE 3** and **OPERATING MODE 4** signify **STOP ON =** and **STOP ON ≠** functions, respectively. These two operations are extensions of the **COMPARE** function (see next paragraph).

5.2.4.1 The **COMPARE** function is an important feature of any state logic analyzer for it permits the user to perform a Data Comparison between current and stored information. Current data refers to newly-collected state information; stored information signifies reference information. In performing a **COMPARE**, information in the **MAIN** Memory is compared with information in the **AUX**iliary Memory. To load information from the **MAIN** to the **AUX**iliary memory, press the **A M** button in the **MEMORY** keyboard segment. Pressing the **MAIN** and **AUX**iliary keys will display data stored in these two memories, respectively. Information will be displayed in tabular format for operator evaluation.

5.2.4.2 After loading the **MAIN** storage contents into the **AUX**iliary memory, press the **A/M** key in the **COMPARE** keyboard segment in order to conduct a data comparison between the two memory-sets. Any differences between reference and newly-captured data will be displayed in reverse video.

5.2.4.3 In addition to the primary **COMPARE** operation, two extended functions are available. These useful capabilities are the **STOP ON =** and **STOP ON ≠** operations which correspond to **OPERATING MODES 3** and **4**, respectively, on the **MODE MENU.**

5.2.4.4 Since the typical **COMPARE** function employing **MODES 3** and **4** will involve scanning the entire memory of the analyzer, a variable reference memory-depth of 1 - 250 words is provided for these two extended features.

5.2.4.5 To conduct either the **STOP ON =** or **STOP ON ≠** function, first, select the **MODE MENU** (if not currently in it) by pressing the **MODE** button. Then, specify either **OPERATING MODE 3** or **4**, for **STOP ON =** or **STOP ON ≠**, respectively. Enter, using the correct decimal key(s) from the **ENTRY** segment, the required memory **DEPTH** up to 250. Execute a **RUN** and then load information from the **MAIN** to the **AUX**iliary Memory. Then, perform a **STOP-ON-EQUALS** or **STOP-ON-NOT-EQUALS** procedure by pressing the $\frac{\neq}{=}$ **RUN** key to start the **COMPARE** operation as specified in the **MODE MENU.**

5.2.4.6 For example, if the **STOP ON** ≠ mode has been selected, then, when any newly-captured data is compared with reference data and they are **equal**, the analyzer will automatically reinitialize for another data collection run. If, however, the compared data are **not-equal**, the analyzer will stop and the newly-captured data is then stored for further evaluation. Essentially, the same **COMPARE** sequence would occur if the operator had selected the **STOP ON** = mode, except that the analyzer would terminate data-acquisition and store newly-captured data only when the auxiliary and main memories are found to be equal.

5.2.4.7 **STOP-ON-NOT-EQUALS** and **STOP-ON-EQUALS** features are of tremendous value, for example, in performing a **COMPARE** operation to identify an occasional error occurring throughout an extensive program or when a software defect is adversely affecting program execution. By using the $\stackrel{\neq}{=}$ **RUN** feature, the program can be regularly scanned and left unattended (i.e. baby-sitting) until the desired **STOP ON** = or **STOP ON** ≠ condition occurs. Newly captured data will be stored and, again, any differences between reference and newly-captured data will be highlighted upon display for inspection.

INPUT MENU

- Permits selection of either a **COMMON** or **MULTIPLEX** clock.
- Permits selection of an **IN**Ternal or **EX**Ternal clock source.
- Permits selection of **IN**Ternal **CLK UNITS** and **PERIOD.**
- Permits selection of **CLOCK QUAL**ifiers for Input Probes A and B + C.
- Permits selection of **TRIG**ger **QUAL**ifiers for Input Probes A and B + C.
- Permits selection between **STD** (Standard) and **INV** (Inverse) **INPUT LOGIC.**
- If an **EX**Ternal clock is specified, this menu permits a selection between rising (⎍) or falling (⎏) **CLOCK SLOPE** for strobing data into the state analyzer.

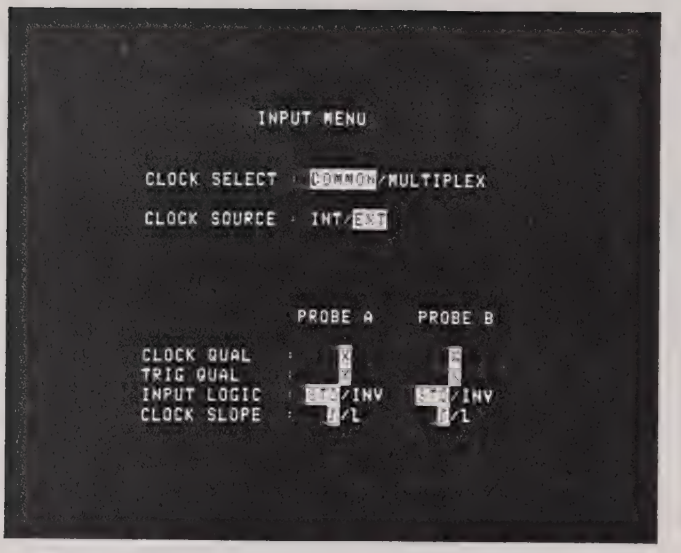

Figure 5.2 - Input Menu in Default Display

5.3 INTRODUCTION - INPUT MENU

5.3.1 Refer to Figure 5.2 above showing the complete **INPUT MENU** displayed in the default (set-up) mode. The user is directed to this menu after making a selection of either **CLOCKS** or **TIME** in the **TIMED INTERVAL** field of the **MODE MENU.**

5.3.2 Inverse-video cursor function and highlighting of selected field variables are the same in the **INPUT MENU** as in the **MODE MENU.**

5.3.3 The first field within the **INPUT MENU** is the **CLOCK SELECT** as shown below:

5.3.3.1 Using the **ALT**ernate key, the operator chooses the type of clocking needed for the particular analysis being conducted. Selecting **COMMON** (and specifying an **EXT**ernal system clock - see next field choice below) allows Input Probe C to provide clocking for both Channel A as well as Channels B + C. Selecting **MULTIPLEX** (and specifying, again, an **EXT**ernal system clock) allows Input Probe A to provide clocking for Channel A; allows Input Probe C to provide clocking for Channel B + C. Finally, using the **INT**ernal Clock of the analyzer and selecting either **COMMON or MULTIPLEX**, will permit A and B + C transmission channels of the analyzer to operate from the **INT**ernal clock generator.

5.3.4 The next field selection is the **CLOCK SOURCE.**

5.3.4.1 At this point, the operator may select either an **INT**ernal or **EXT**ernal **CLOCK SOURCE**, for data strobing into the analyzer. Generally, the measurement/monitoring task requires the use of an **EXT**ernal system-clock, permitting synchronous data sampling by the analyzer. More specifically, the clock counts, which are generally regular in frequency, allow the instrument to monitor system-events specified during set-up. These events would include, for example, simple state (word) parameters such as addresses or more sophisticated system-event characteristics such as state sequences.

5.3.4.2 In using the state analyzer for data measurement/monitoring, it is imperative that state information be "monitored and interpreted" by the analyzer exactly as the System-under-Test "monitors and interprets" the information. The analyzer, therefore, cannot require any "hold (delay) time" after the end of the active edge of the system clock, during which period sampled data has to remain stable. This would generate a "positive hold time" which, if present, could cause information clocked into the analyzer to become ambiguous.

5.3.4.3 Such ambiguous information is unreliable since it may actually represent one of three possible states: (1) the desired present state, (2) the unwanted next state, or (3) some undesired transitional state information.

5.3.5 If the operator has specified the use of either the **INT**ernal **CLOCK SOURCE** or **TIME** from the **MODE MENU**, the **INPUT MENU** will next require specification of **INT**ernal **CLK UNITS** and **PERIOD.** Shown below is a representative field entry for 500 microseconds.

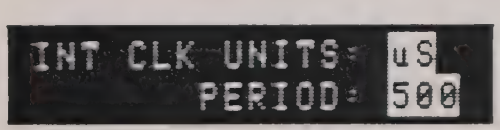

5.3.5.1 Series 200 instruments provide regular clock pulses (from the **INT**ernal Clock) from 1 to 999 for the **μS, mS** and **S** units; **100,200,** and **500** for **nS** units (shown below for **500 nS**). (If the **INT**ernal Clock and **nS** range are being used for the Word Generator, only a 200 and **500** selection is available.)

5.3.5.2 If the operator selects the **EXT**ernal **CLOCK SOURCE**, it is still necessary to specify **INT**ernal **CLK UNITS** and **PERIOD** for required **TIME** parameters. For example, the **TIME** between the last Arming and Trigger Words may need specification.

5.3.6 The final set of field selections in the **INPUT MENU** depends on whether **INT**ernal or **EXT**ernal Clocking is specified.

5.3.6.1 Shown below is the field-selection display if an **EXT**ernal **CLOCK SOURCE** has been selected; it has four field entries. If an **INT**ernal **CLOCK SOURCE** has been selected, the **CLOCK SLOPE** field is unnecessary and is, therefore, not displayed.

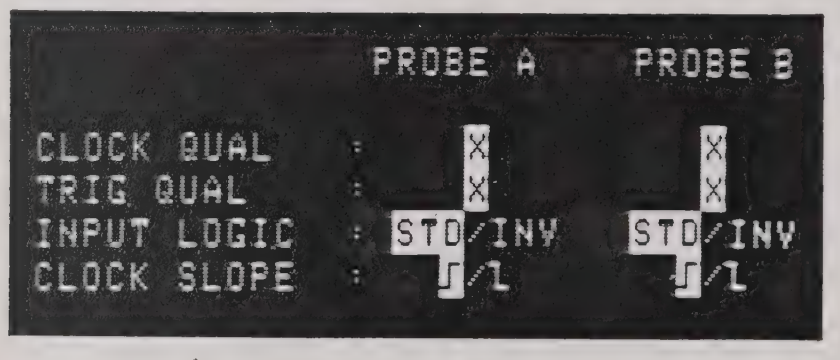

5.3.6.2 In filling these fields, the operator enters the appropriate information for **X** (Don't Care) or Logic **1/0** (High and Low Logic, respectively) for each active clock, using the **ENTRY** keyboard segment.

5.3.6.3 The first entry field for selection specifies the operator's need for using **CLOCK QUAL**ifiers. This is a common "advanced" feature on most state logic analyzers. The following example illustrating prudent use of clock qualification is premised on (1) the System-under-Test is a 6800 uP-based one and (2) the operator wishes to avoid the capture of unwanted state information. The operator might choose to enter a **1** into the **CLOCK QUAL**ifier field(s) for the appropriate Input Probe(s). Realizing that a Valid Memory Address (VMA) bus line is low during idle periods when the clock is running and the 6800 uP is simply executing internal instructions, the operator might choose to enter a **CLOCK QUAL**ifier(s) of **1**. This would preclude the collection of extraneous data. Other test situations, however, might require use of **0** or **X** for low or Don't Care, respectively.

5.3.6.4 **TRIG**ger **QUAL**ifiers can also be employed depending on the state information needed. This allows further qualification of the start of data capture. Entering a **0** or **1** in the **TRIG**ger **QUAL**ifier field will permit the operator to avoid triggering data collection **every** time the Trigger Word is recognized during program execution or hardware analysis.

NOTE

The field-selections for **CLOCK** and **TRIG**ger **QUAL**ifiers are independent choices with respect to the next **INPUT MENU** entry described - that of **INPUT LOGIC**. Therefore, in performing state analysis, there need not be a correspondence between clocking/triggering qualifiers and the **INPUT LOGIC** selected for active test probes.

5.3.6.5 The third field choice for the operator is **INPUT LOGIC**. This field provides an alternate selection between **STD** (standard - i.e. positive logic in which a high is indicated by bit **1**) and **INV** (inverse - i.e. negative logic in which a low is indicated by a bit **1**). The operator should specify **INPUT LOGIC** for each active probe.

5.3.6.6 Finally, using an **EX**Ternal Clock will require selection between a rising (⌠), or falling (⌡) **CLOCK SLOPE** for data capture. Selection of **CLOCK SLOPE** should be made for each active probe.

TRIGGER MENU

- Permits selection of **ARM** words.
- Permits selection of a **TRIG**ger word.
- Permits selection of **MASKING.**
- Permits selection of **WORD GROUPING** display for the Input Probes A, B and C.
- Permits selection of **NUMBER BASES** and **ASCII FORMAT.**

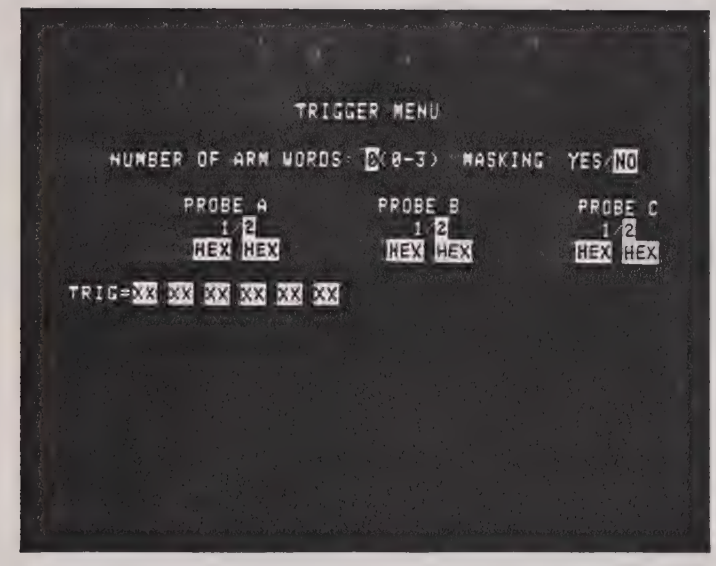

Figure 5.3 - Trigger Menu in Default Display

5.4 INTRODUCTION - TRIGGER MENU

5.4.1 Refer to Figure 5.3 above showing the entire **TRIGGER MENU** in the default mode and ready for set-up. Refer back also to Paragraphs 5.2.2 and 5.2.3 describing the use of the **NORMAL** and **AUTO**matic **ARM**ing in the **MODE MENU** subsection as required.

5.4.2 Series 200 analyzers offer the operator an extended Trigger capability beyond that of the simple data capture on a specific Trigger Word. Since a particular software subroutine is often accessed many times during execution, the use of up to 3 **ARM**ing Words ensures that a particular portion of the program is located as specified in menu set-up before data collection can occur. Use of this selective Pretrigger feature significantly avoids capture of extraneous data during a given measurement operation.

5.4.3 For a discussion of the **AUTO-ADD** and **RESTART** features, found on all Series 200 analyzers, the operator is referred to the next subsection describing the **DELAY MENU.**

5.4.4 Set-up of the **TRIGGER MENU** begins by specifying the **NUMBER OF ARM WORDS** from **0 (0-3)** using the appropriate **ENTRY** key. Shown below and highlighted in inverse video is a 3-word **ARM**ing sequence permitting a selective trigger.

5.4.5 The **NUMBER OF ARM WORDS** specified will then be displayed as the same number of **ARM** Word-Fields for data entry. Located on display between the display-fields for **PROBE(S)** and **TRIG**ger Word(s), each **ARM** Word-Field is correspondingly numbered and its initial status is indicated by all **X** ("Don't Care") symbols. (**REMEMBER:** To trigger, **ARM** Words must be recognized in the exact sequence as specified in the **TRIGGER MENU.**) Using **ARM** Words as a means to achieve selective triggering, then, permits the operator to locate program sections that may be branched, looped, or nested-loops of state information-flow even before final data capture.

5.4.6 In addition to the X ("Don't Care") feature - indicating that all valid digit values are acceptable - full **MASKING** conditions are also selectable during **TRIGGER MENU** set-up. The **MASKING** field is selected using the **ALT**ternate key, as illustrated below showing a **YES** choice.

5.4.7 **MASKING** applies to all **ARM** Words as well as the **TRIGGER** Word, and allows the operator to disengage from use specific data-bit channels. Channels selected for **MASKING** are uniformly disregarded by the analyzer.

NOTE

Do not enter an X ("Don't Care") digit into a **MASK** field as this is an **INVALID ENTRY.**

MASKING can be employed to disregard specific data channels in setting-up full **TRIGGERING** conditions. Thus, by using the single **MASKING** control, multiple **TRIGGERING** conditions can be made available to the operator.

5.4.8 The last two set-up fields in the **TRIGGER MENU** are the 8-bit Groupings and Number Bases for Input Probes A, B and C. Under each displayed Probe Label (**PROBE A, PROBE B,** and **PROBE C**), as shown below for **PROBE A,** either one 16-bit or two 8-bit Grouping(s) can be specified using the **ALT**ernate key. Then, each Base Field (displayed immediately below the Groupings Fields) can be filled as required using **HEX**adecimal, **BIN**ary, or **OCT**al-coded/**ASCII** - formatted set-up instructions by pressing the appropriate **DISPLAY** key.

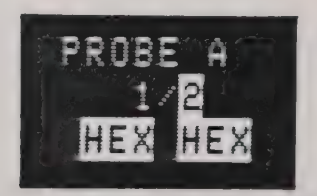

5.4.9 In addition to selecting the Number Base/ASCII Format for **TRIGGER MENU** set-up, these same **DISPLAY** keys can be used to convert the full data display from one format to another (but only when data is being displayed).

DELAY MENU

- Permits selection of **ARM DELAY** including **UNITS** and **AMOUNT.**
- Permits selection of **TRIG**ger **DELAY** including **UNITS** and **AMOUNT.**
- Permits selection of **AUTO-ADD** feature, including the **AMOUNT.**
- Permits selection of **RESTART** (Word) feature.

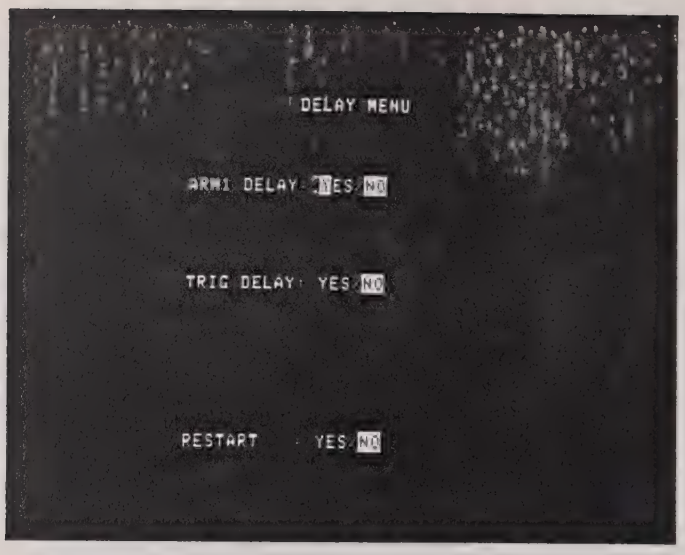

Figure 5.4 - Delay Menu in Default Display

5.5 INTRODUCTION - DELAY MENU

5.5.1 Refer to Figure 5.4 above showing the complete **DELAY MENU** in the default mode ready for set-up.

5.5.2 Some measurement situations require more Trace Selectivity than provided when using multiple **ARM**ing Words and a flexible Pretrigger capability, which permits the **TRIGGER** Word to be located anywhere within memory. To meet this demand, Series 200 analyzers offer two extensive **DELAY** features - one for **ARM**ing and one for **TRIG**ger Word qualification.

5.5.3 An **ARM DELAY** is a command that adds a **DELAY** in **CLOCKS** or **EVENTS** in any acceptable format to **ARM WORD 1.** Trigger recognition will **not** occur until the **ARM DELAY** is met. The **DELAY** will range between 0 and 2^{20}-1(1,048,575).

5.5.4 A **TRIG**ger **DELAY** is a command that adds a **DELAY** in **CLOCKS** or **EVENTS**, in any acceptable format to the **TRIG**ger Word itself. In using this **DELAY**, data-capture will **not** occur until both the **TRIG**ger Word is recognized and the specified **DELAY** is met. The **TRIG**ger **DELAY** also provides a range between 0 and 20^{20}-1(1,048,575).

5.5.5 Selecting the **ARM/TRIGger DELAY** permits either bypassing a specific number of **CLOCKS** or **EVENTS** after the **ARM**ing/**TRIG**ger Words have occurred or recognizing a preset number of occurrences of the **ARM**ing/**TRIG**ger Words before Triggering can occur. A typical example might show both **ARM** and **TRIG**ger **DELAYS** specified so that Triggering Conditions can only be satisfied when (1) a selected **ARM** Word has been recognized in program execution 5 times, after which (2) a **TRIG**ger **DELAY** of 9 clock cycles is still necessary for data-capture to begin. Shown below are two typical multiple-field displays showing set-ups for **ARM** and **TRIG**ger **DELAYS**.

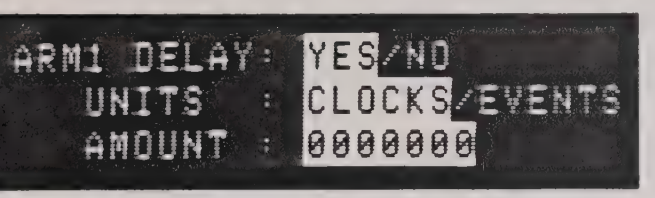

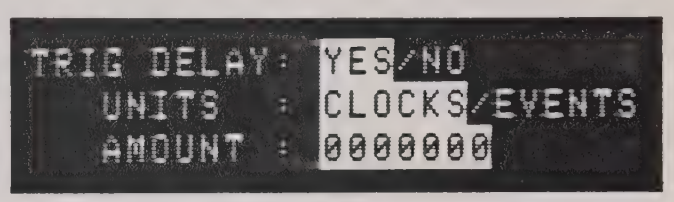

5.5.6 After selecting any required **DELAY**, the operator can specify whether the **AUTO-ADD** feature is needed. Shown below is a typical field set-up.

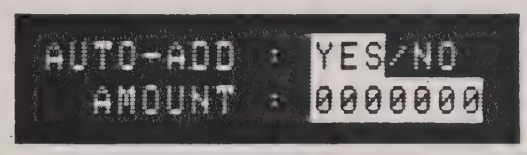

5.5.7 Often large data blocks must be analyzed. Usually, this operation requires either changing the **TRIG**ger Word or increasing the **DELAY**s in order to scan new sections of information, both procedures requiring menu-modification during actual measurement runs. By selecting **AUTO-ADD**, a specified number of delays is automatically added into the triggering conditions after each successive data acquisition. **AUTO-ADD** expedites data interrogation, then, by permitting data-collection to proceed progressively through large data blocks. For example, by automatically adding fixed delays to the **TRIG**ger **DELAY** after each data run, the analyzer can be set-up to scan information flow in up to 250 word segments through such a large data block.

5.5.8 Finally, all Series 200 analyzers offer a unique (**TRIGGER**) **RESTART** feature in order to prevent erroneous Triggering. After **RESTART** has been selected, the operator enters the specific **TRIGGER** word which can be recognized anywhere during **ARM**ing/**TRIGGER**ing conditions. For example, **RESTART** will occur if **ARM**ing/**TRIGGER**ing conditions are being set-up in an incorrect sequence or an invalid data path is being used in program execution. **RESTART** means that the entire **ARM**ing/**TRIGGER**ing will reinitialize automatically when the **RESTART** Word is recognized by the analyzer.

6.1 INTRODUCTION

6.1.1 This section provides descriptive information on the Series 200 Word Generator. This feature is standard on the 205, optional on the 202, and unavailable on the 201. The Word Generator is a built-in 16-channel hardware stimulator which outputs word-serial, bit-parallel words. From 1 to 250 words in memory can be output by the generator. Using the Word Generator, operating off either external or internal clocking, provides a convenient method for stimulating external hardware for analysis by the rest of the system. The Word Generator for Series 200 instruments (Option 49) comprises a Word Generator PCB Assembly, Probe Assembly with PCB, and a Grabber Kit.

6.2 WORD GENERATOR KEYBOARD

6.2.1 Before describing the Word Generator Menu itself, front-panel keyboard controls and rear-panel features for the generator will be discussed.

6.2.2 The **GEN** button is located in the **MENU** keyboard segment as shown below and is used to call-up the **WORD GENERATOR MENU** for set-up. (On the 201, the inoperative **SFO** key is substituted for the **GEN** button.)

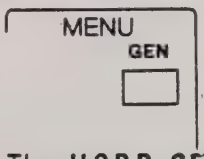

6.2.3 The **WORD GEN** keyboard segment, as shown below, incorporates both the **LOAD** and **STEP** buttons.

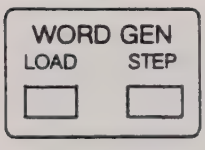

Use the **LOAD** button in order to display the Volatile Memory of the Word Generator for loading. Loading may either be manual using the **ENTRY** keyboard or automatic, depending on which **DATA ENTRY** mode was specified in the **WORD GENERATOR MENU** (see subsection 6.3 as required). Use the **STEP** button to move the Word Generator display one word a a time when operating in the single-step mode or to output one cycle when running in the single-cycle mode.

6.2.4 The **ARM** keyboard segment, as depicted below, comprises the **RUN** and **STOP** keys.

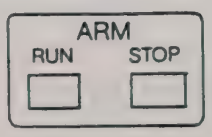

When using the analyzer only as a Word Generator, use the **RUN** button to initiate an output from the Word Generator; when using the instrument both as an analyzer and Word Generator, use the **RUN** key to initiate data collection and/or Word Generator output. The **STOP** button can be used to terminate any operation initiated by the **RUN** key.

6.3 WORD GENERATOR MENU

6.3.1 Shown below in Figure 6.1 is the **WORD GENERATOR MENU** in the default mode, ready for manual set-up.

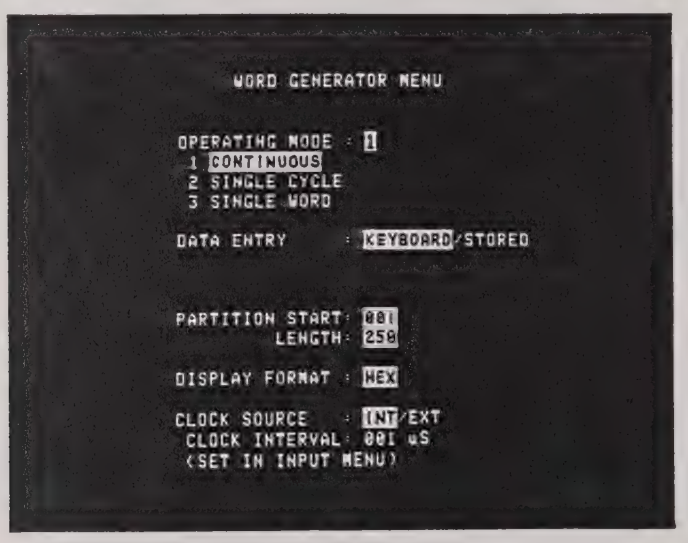

Figure 6.1 - Word Generator Menu in Default Display

6.3.2 Set-up for the Word Generator is achieved by one of the following methods:

(1) Manual set-up using the **WORD GENERATOR MENU** and the **ENTRY** keyboard segment.

(2) Set-up by recalling one of the stored Word Generator Menus from either the Volatile or Non-Volatile Memories

(3) Set-up using the GPIB system.

6.3.3 The following several paragraphs will describe manual set-up of the **WORD GENERATOR MENU** in conjunction with proper operation of keyboard controls.

6.3.4 Operating Mode

6.3.4.1 The first field for selection on the **WORD GENERATOR MENU** is the **OPERATING MODE** which indicates how stored Word Generator information is output to the system being exercised. Selection of the desired **OPERATING MODE** is performed by pressing the appropriate decimal **ENTRY** key for either "1," "2," or "3." The specified mode and its corresponding number will be highlighted in reverse video.

6.3.4.1.1 The **CONTINUOUS** mode (1), shown below, means that the Word Generator will continuously output word-segments from memory until the run is terminated.

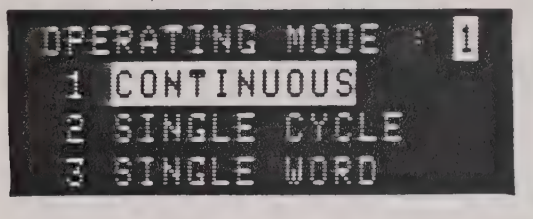

6.3.4.1.2 The **SINGLE CYCLE** mode (2), shown below, indicates that the Word Generator will output only one word-segment cycle from memory after pressing the **RUN** key and stop. Further **SINGLE CYCLE** outputs can be made by the **STEP** button for each successive run.

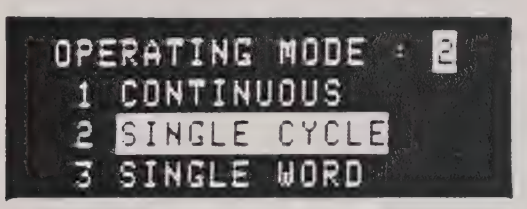

6.3.4.1.3 The **SINGLE WORD** mode (3), shown below, signifies that the Word Generator will output one word continuously to the system until the operation is terminated by pressing the **STOP** button. Using the **STEP** key will move the Word Generator to the next word for outputting when in the **SINGLE WORD** mode. Only one clock is generated each time the **STEP** key is pressed while running in the **SINGLE WORD** mode.

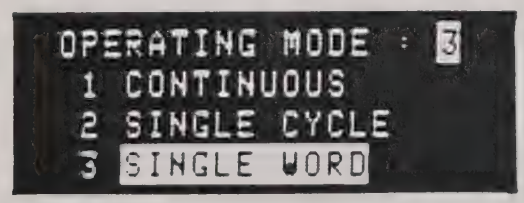

6.3.5 **Data Entry**

6.3.5.1 The second field for menu selection is that for **DATA ENTRY.** If manual loading of the Word Generator Memory is planned, choose the **KEYBOARD** field-segment, as shown below, using the **ALT**ernate button.

Using the **KEYBOARD** segment will allow the Volatile Memory of the Word Generator to be loaded from the keyboard.

6.3.5.2 If the Word Generator Memory is to be automatically loaded from any source, select the **STORED** field-segment, as shown below.

After the **STORED** field is chosen, the interactive menu will next display another qualifying field for selection, as shown below:

Using the **ALT**ernate button, select the **USER ROM** field-choice if one of the stored data set-ups from this source is desired. Then specify, as shown below, the **OFFSET** in **BYTES** (maximum: 2047 bytes) for the **USER ROM**.

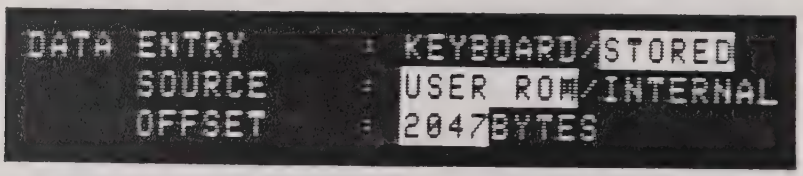

Selection of the **INTERNAL** field-choice permits filling of the Word Generator Memory with a pseudo-random number pattern when the **LOAD** key is pressed.

6.3.5.3 **Word Generator User ROM** - the user ROM permits the operator to recall data patterns which have been stored in a 2716 EPROM. To use this feature the operator programs the EPROM on the CPU board of the logic analyzer as described in subsection 6.3.5.3.4. Then, by selecting **USER ROM** as the **DATA SOURCE** in the **WORD GENERATOR MENU** and completing a Word Generator load, the operator can store any 250 word segment in the Word Generator Memory from the 2716 EPROM. The desired word segment is chosen by using the ROM offset described in paragraph 6.3.5.3.3.

6.3.5.3.1 **User ROM Header** - to preclude error messages from occurring, the first few bytes of the user ROM are not available for data storage and must be programmed by one of the two following methods:

1) For most applications, the operator only needs to store a hexadecimal "FF" at address 0 in the EPROM. User data may then be entered at address 1 and then continued through address 2047 (hexadecimal "7FF").

2) Refer to Figure 6.2. In critical applications, the operator may need to verify the integrity of the EPROM's data during the instrument's power-on ROM check using the logic analyzer. To use the analyzer for this check, the EPROM must have the 11-byte header and locations 00 through 11 must contain the hexadecimal data indicated in the figure.

NOTE

When the 2716 EPROM with the 11-byte header is installed, it is shown in the Unit Menu display of the analyzer.

ADDRESS	HEXADECIMAL
00	12
01	57
02	44
03	47
04	45
05	4E
06	20
07	55
08	53
09	45
0A	52
0B	20
0C	52
0D	4F
0E	4D
0F	30
10	31
11	08
12	CHECKSUM

Figure 6.2 - User Rom Header (11-Byte) Showing Hexadecimal Data by Address

Also, to prevent error messages, the EPROM's single byte checksum must equal zero. That is, when all bytes (including the header) are added, the result must be XX00 in hexadecimal code where "X" signifies "Don't Care."

NOTE

Many programming instruments for EPROMs provide a checksum calculating capability used to determine the value of a compensatory byte which can then be programmed into the EPROM to force the checksum to 00. Hexadecimal address 12 is a good choice of location for storing this compensatory checksum byte.

6.3.5.3.2 **User ROM Data Pattern** - the data for the Word Generator comprises a 16-bit word which occupies two adjacent bytes in the EPROM. Refer to Figure 6.3.

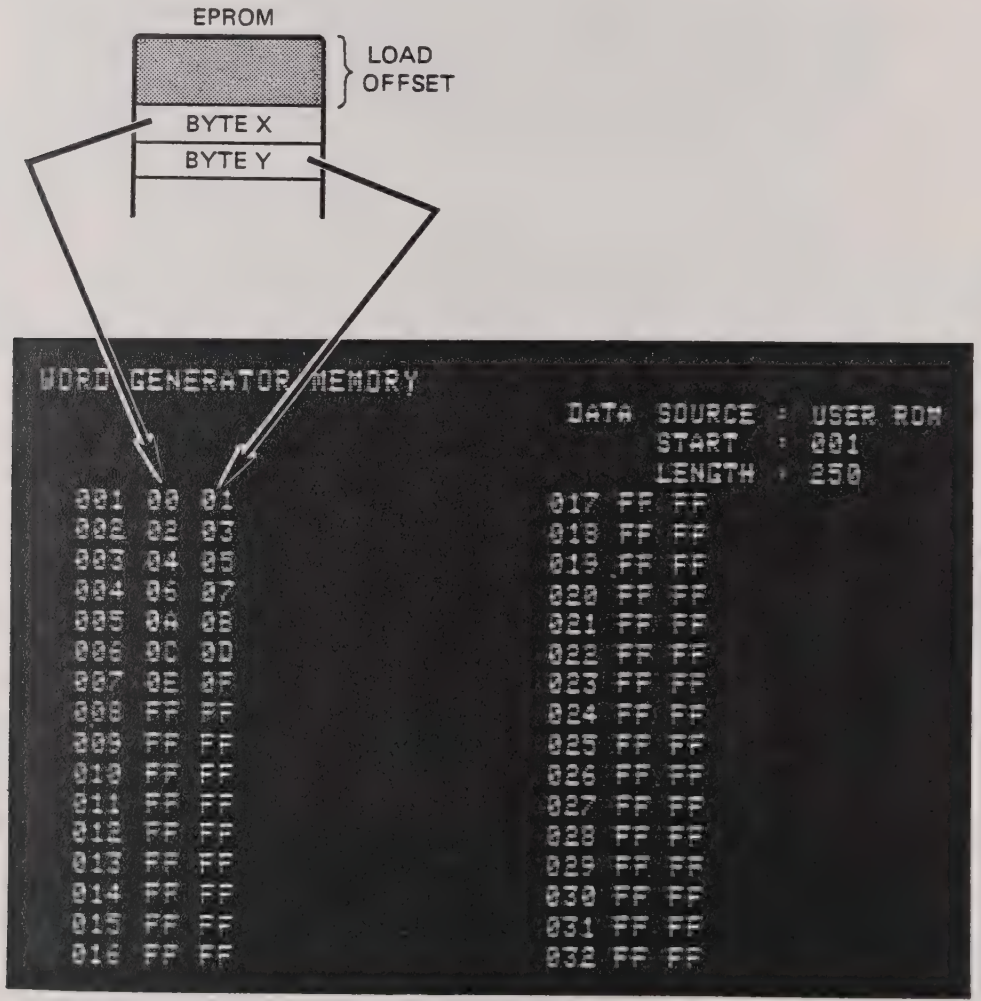

Figure 6.3 - Data Display for the Series 200 User ROM
(shown without ROM header using a 19-byte offset)

6.3.5.3.3 **User ROM Offset** - refer to subsection 6.3.5.2 if necessary, for a description of how to enter keyboard inputs for selecting various user ROM offsets (0-2047). Refer to Figure 6.4 illustrating the use of the ROM offset during a Word Generator load.

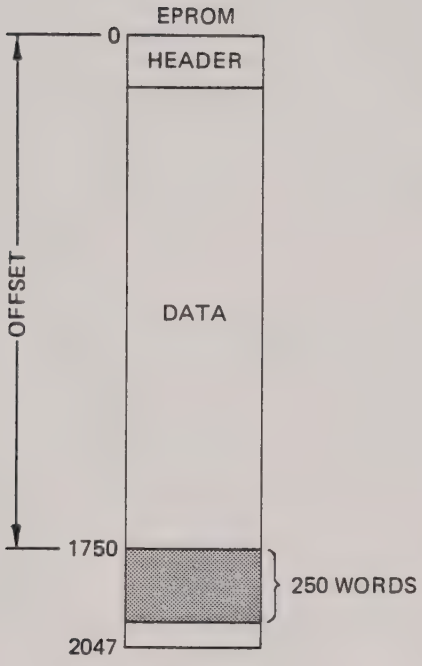

Figure 6.4 - User ROM Offset During Word Generator Load

Notice that a nonzero offset causes the load to occur from an EPROM address other than zero. As shown in the figure, an offset of 1750 was selected in the **WORD GENERATOR MENU.** Therefore, any subsequent Word Generator load from the user ROM will download 250 words starting from decimal EPROM address 1750. (The operator should always specify a nonzero offset which is large enough to bypass the header during the Word Generator Memory loading operation.)

6.3.5.3.4 **User ROM Installation**

a) As shown in Figure 6.5, for Series 200 logic analyzers with CPU board Assembly P/N 401707, the user ROM is installed into socket U40. This socket is easily identified by the designation "USER ROM" on the component side of the PCB.

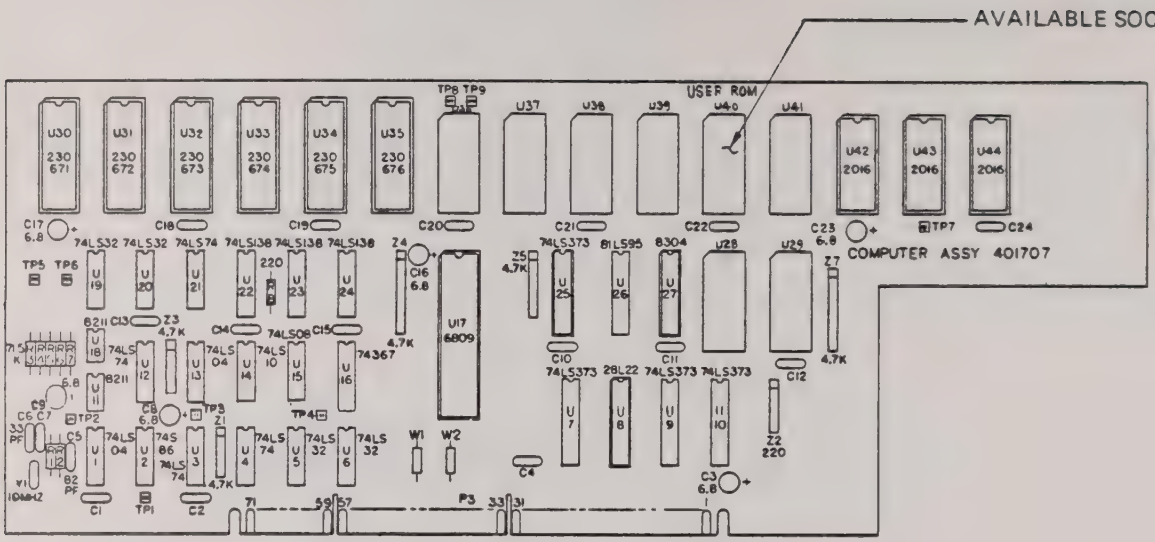

Figure 6.5 - User ROM Installation Socket U40 on CPU Assembly Board 401707.

b) As shown in Figure 6.6, for Series 200 logic analyzers with CPU board Assembly P/N 401661, the user ROM is installed into socket U39.

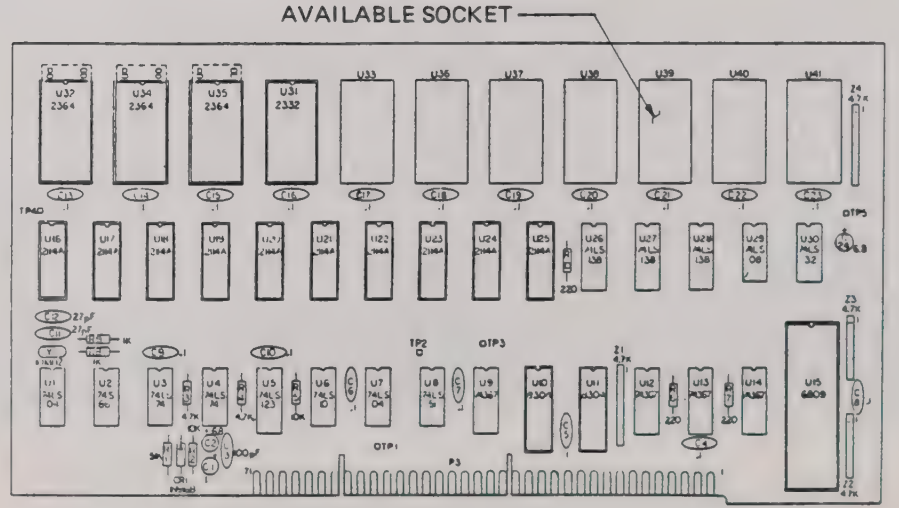

Figure 6.6 - User ROM Installation Socket U39 on CPU Assembly Board 401661

6.3.6 **Memory Partitioning and Length**

6.3.6.1 The **PARTITION START** refers to the location within the Word Generator Memory from which word information output will initiate. The **LENGTH** refers to the number of words that will be output from memory. In the **CONTINUOUS** mode, the output will continue with wrap-around to **PARTITION START** for each successive run. Operation is terminated by pressing the **STOP** button or when the logic analyzer section has its input memory filled. For each word or cycle output in the **SINGLE WORD** or **SINGLE CYCLE** mode, respectively, the **STEP** button must be pressed. In the **SINGLE WORD** operation, continuous use of the **STEP** button will result in wrap-around to **PARTITION START.** In the **SINGLE CYCLE** operation, pressing the **STEP** button at the end of the cycle will restart output at **PARTITION START.**

6.3.6.2 Shown below in Figure 6.7 is a model of the Word Generator Memory illustrating both its 250-word capability as well as sample settings for an output of 240 words. The example indicates that output will begin at word number "5" and terminate after outputting word number "245." The **PARTITION START** would correspond to an entry of "005," the **LENGTH** to "245." To output all 250 available words, simply enter "001" in **PARTITION START** and "250" in **LENGTH** display segments.

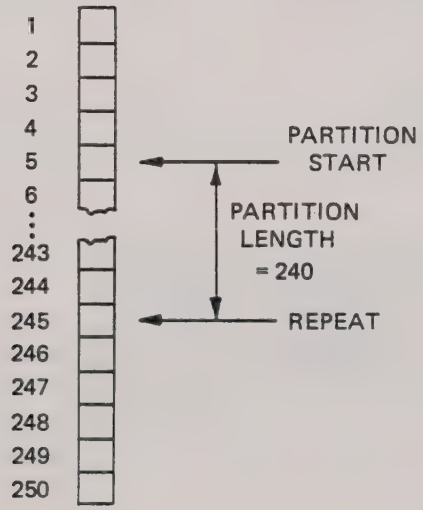

Figure 6.7 - Model of Word Generator Memory Showing Sample Output

6.3.6.3 To fill the **PARTITION START** field-segment on the display, press the required decimal **ENTRY** buttons. Next, specify the number of words between 1 and 250 corresponding to the **LENGTH** of the memory-segment requiring Word Generator output. Use the **ENTRY** keys again to complete this field choice. A typical field choice is shown below.

6.3.7 Display Format

6.3.7.1 As depicted below for **HEX**adecimal base, for example, the **DISPLAY FORMAT**, which is next, should be filled by pressing the appropriate **DISPLAY** button. The output from the Word Generator Memory can be displayed using **HEX**adecimal, **BIN**ary, and **OCT**al bases.

6.3.8 Clock Source

6.3.8.1 The last menu-field involves specifying the **CLOCK SOURCE** for either **INT**ernal or **EXT**ernal timing of Word Generator output. Shown below, for example, is a field-selection made for **INT**ernal clocking.

NOTE

The **INT**ernal Clock is programmable from 200 nsec (equal to a maximum output rate of 5 MHz) to 999 seconds. Maximum output rate using the **EXT**ernal Clock is 5 MHz.

6.3.8.2 The **CLOCK INTERVAL**, noted also below, should be set in the **INPUT MENU** if the internal clock of the analyzer is to be used for output by the Word Generator. The generator may also output in synchrony with the external clock.

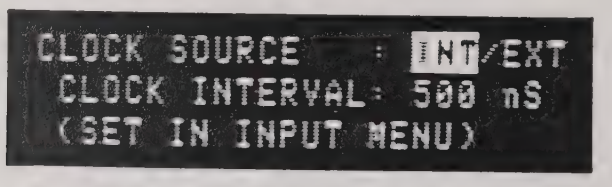

6.3.9 **Word Generator Probe**

6.3.9.1 **Probe Description**

6.3.9.1.1 The external **Word Generator Probe** is a single-pod configuration incorporating all 16 data lines as well as external clock, external inhibiting, data synchronizing and ground lines. All signal line designators and color-codes for the 20-lead ends appear for operator reference on the outside of the pod housing as shown below in Figure 6.8.

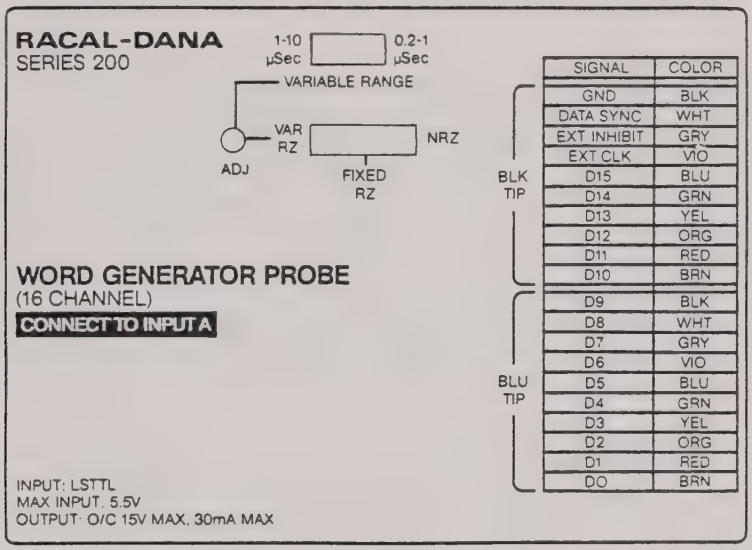

Figure 6.8 - Word Generator Information on Pod Housing

6.3.9.1.2 The Word Generator Probe must be inserted into **INPUT A** on the front-panel of the analyzer. This connection permits conversion of 16 data inputs to a 16-bit output for exercizing the System-under-Test by the analyzer. The front-panel connector itself is a 34-pin header receptacle (double row, 17 pins per row) easily oriented for insertion by a cutout in the margin of **INPUT A.**

6.3.9.1.3 Probe/System Interface is achieved using either the 20-pin header receptacle (double row, 10-data pins per row) or with the Grabber (Kit)—both supplied with the Word Generator.

6.3.9.1.4 A 36-inch Cable (Ribbon) interconnects the Probe pod and front-panel connector.

6.3.9.2 **Probe Operation**

6.3.9.2.1 The Word Generator Probe outputs 16-bits of data to the System-under-Test in Rz, Variable Rz and NRz formatted-modes. These outputs are selectable by means of a 3-position switch located on the probe pod. Also, the pulse width for the Variable Rz can be manually adjusted from 0.2 to 10.0 sec in two ranges (0.2-1.0 and 1.0-10.0 sec). The range is selected by a second pod switch; the adjustment is made through an adjustment hole in the top side of the pod.

SECTION 7 GENERAL PURPOSE INTERFACE BUS

7.1 INTRODUCTION

7.1.1 This section provides necessary information on the system operation of Series 200 logic analyzers using the IEEE-488-bus (GPIB). Specifically, the material describes the Model 202 fitted with Option 55 and Model 205 having the GPIB as a standard feature.

7.2 GENERAL PURPOSE INTERFACE BUS (GPIB)

7.2.1 Following a general description of the IEEE-488 bus, subsequent subsections cover basic information on the extensive performance capabilities of 202/205 state analyzers using the GPIB. In general, when either the 202 or 205, using its GPIB capability, is combined with a system controller, automatic state analysis and testing of digital systems becomes available to the operator who, otherwise, would be forced to rely on manual procedures. The GPIB assembly, then, permits remote programming of all bus controls with data collected by the state analyzer being transferred to the controller for automatic analysis. This is achieved using a set of GPIB Program Commands and Message Outputs. Also, when required, selected hard copy productions (eg: state data listings and operating status information) can be generated using any number of GPIB-compatible printers.

7.2.2 All inputs and outputs for the GPIB are made using a 24-pin connector (J205, shown in Figure 7.1) on the rear panel of the analyzer. Pin location, line identification and GPIB operation are in compliance with IEEE-standard-488-1978. The GPIB provides the interface capability between all instruments, including the analyzer, residing on the bus and the system controller. Throughout this section, the "controller" referenced is presumed to be a Model 9825 Hewlett-Packard Desktop Computer. GPIB-Interface signal pin assignments are shown in Figure 7.2. GPIB-Interface subsets available when operating 202/205 analyzers are listed in Table 7.1.

7.2.3 The following list summarizes the primary GPIB capabilities when operating 202/205 state logic analyzers:

(a) Menu Setup

(b) Run Initiation

(c) Data Transfer

(d) Display data transfer to printers and other peripherals.

(e) Full-memory movement to other mass storage facilities.

(f) CRT display of GPIB messages (especially useful for the first-time operator).

(g) CRT display of incoming GPIB device-dependent messages while the 202/205 is being addressed to listen. These device-dependent messages are displayed on the top line of the video screen (Broadway scrolling being employed), providing easy verification that the correct GPIB message has been entered.

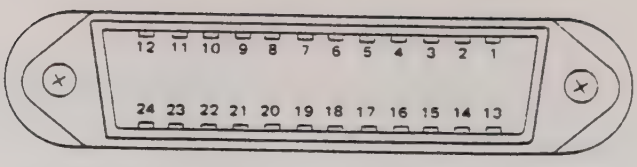

Pin No.	Assignment
1	DIO 1
2	DIO 2
3	DIO 3
4	DIO 4
5	EOI
6	DAV
7	NRFD
8	NDAC
9	IFC
10	SRQ
11	ATN
12	SHIELD

Pin No.	Assignment
13	DIO 5
14	DIO 6
15	DIO 7
16	DIO 8
17	REN
18	GND, (6)
19	GND, (7)
20	GND, (8)
21	GND, (9)
22	GND, (10)
23	GND, (11)
24	GND, LOGIC

Figure 7.1 - 202/205 GPIB-Bus Pin Connector (Rear Panel)

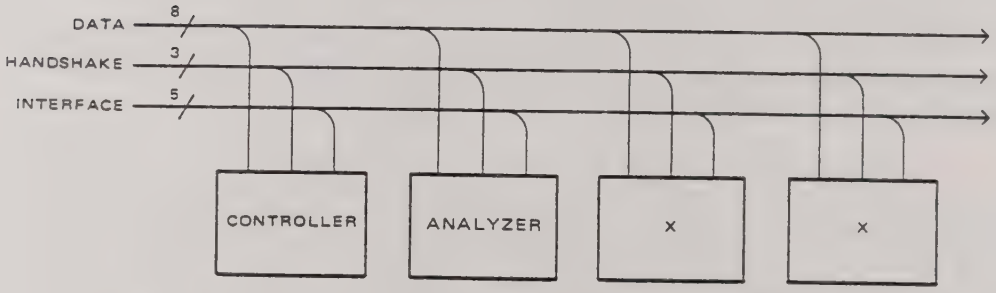

Pin	Nomenclature	Description
1	DIO-1 Data In/Out Bit 1 (LSB)	DATA LINES ARE USED TO TRANSFER DATA FROM ONE INSTRUMENT TO ANOTHER
2	DIO-2 Data In/Out Bit 2	
3	DIO-3 Data In/Out Bit 3	
4	DIO-4 Data In/Out Bit 4	
13	DIO-5 Data In/Out Bit 5	
14	DIO-6 Data In/Out Bit 6	
15	DIO-7 Data In/Out Bit 7	
16	DIO-8 Data In/Out Bit 8	
6	DAV (DATA VALID)	HANDSHAKE LINES OPERATE IN A PROPER TIME SEQUENCE FOR COMPLETE COMMUNICATION BETWEEN INSTRUMENTS
7	NRFD (NOT READY FOR DATA)	
8	NDAC (NOT DATA ACCEPTED)	
5	EOI (END OR IDENTIFY)	INTERFACE LINES ARE USED TO PROVIDE AN ORDERLY FLOW OF INFORMATION BETWEEN UNITS
9	IFC (INTERFACE CLEAR)	
10	SRQ (SERVICE REQUEST)	
11	ATN (ATTENTION)	
17	REN (REMOTE ENABLE)	
12	SHIELD	
18	GND	
19	GND	
20	GND	
21	GND	
22	GND	
23	GND	
24	LOGIC GND	

Figure 7.2 - 202/205 Interface Signal Pin Assignments

Table 7.1 - IEEE-488 1978 Standard Interface Subset Capability

GPIB Subset	Description	Applicable Capability
SH1	Source Handshake	Complete Capability
AH1	Acceptor Handshake	Complete Capability
T5	Talker	Complete Capability (1) Basic Talker (2) Serial Poll (3) Talk only Mode (4) Unaddress if MLA
L4	Listener	Complete except Listen Only (1) Basic Listener (2) Unaddress if MTA
SR1	Service Request	Complete Capability
RL1	Remote/Local	Complete Capability (1) REN - Remote Enable (2) LLO - Local Lockout (3) GTL - Go to Local
PP0	Parallel Poll	No Capability
DC1	Device Clear	Complete Capability (1) DCL - Device Clear (2) SDC - Selected Device Clear
DT1	Device Trigger	Complete Capability GET - Group Execute Trigger
C0	Controller	No Capability
E1	Open Collector Bus Drivers	

7.3 GPIB DESCRIPTION

7.3.1 Of the 24 GPIB-Interface lines available, (shown in Figure 7.2), 7 are grounds, one is a shield and the remaining 16 lines are the signal lines. All the signal lines are either input or output lines, having the following characteristics:

Logic Levels:	(1=low=≤.8V) (0=high=≥2.0V)
Input Loading:	Each Input≈two TTL loads
Output:	The output is capable of driving 15 interface bus loads. It consists of an open-collector driver and is capable of sinking 48 mA with a maximum voltage drop of 0.5V. See the IEEE-488 Electrical Specifications.

7.3.2 Shown in Figure 7.2 are the 16 signal lines consisting of three functionally separate sets: Data (8), Handshake (3) and Interface (5).

7.3.3 DATA

7.3.3.1 The data lines consist of DIO-1 through DIO-8. These signal lines are the channels over which data flows between all instruments on the GPIB in bit-parallel, byte-serial form.

7.3.4 Handshake

7.3.4.1 Refer to Figure 7.3 for a typical handshake flow chart. The handshake lines consist of the DAV (data valid), NDAC (not data accepted) and NRFD (not ready for data) signal lines. These transfer lines provide communication between GPIB bus members (ie: between the instrument that is talking and the instruments that are listening) to synchronize the information flow across the eight data lines. These lines derive their names from their meaning in the low or 1 state (eg: when NRFD is low, the device is not ready for data).

(a) Data Valid

'DAV.' Signifies that valid information is available on the data transfer lines.

(b) Not Ready For Data

'NRFD.' Signifies that the device is not ready to accept information.

(c) Not Data Accepted

'NDAC.' Signifies that the information is not accepted by the bus device.

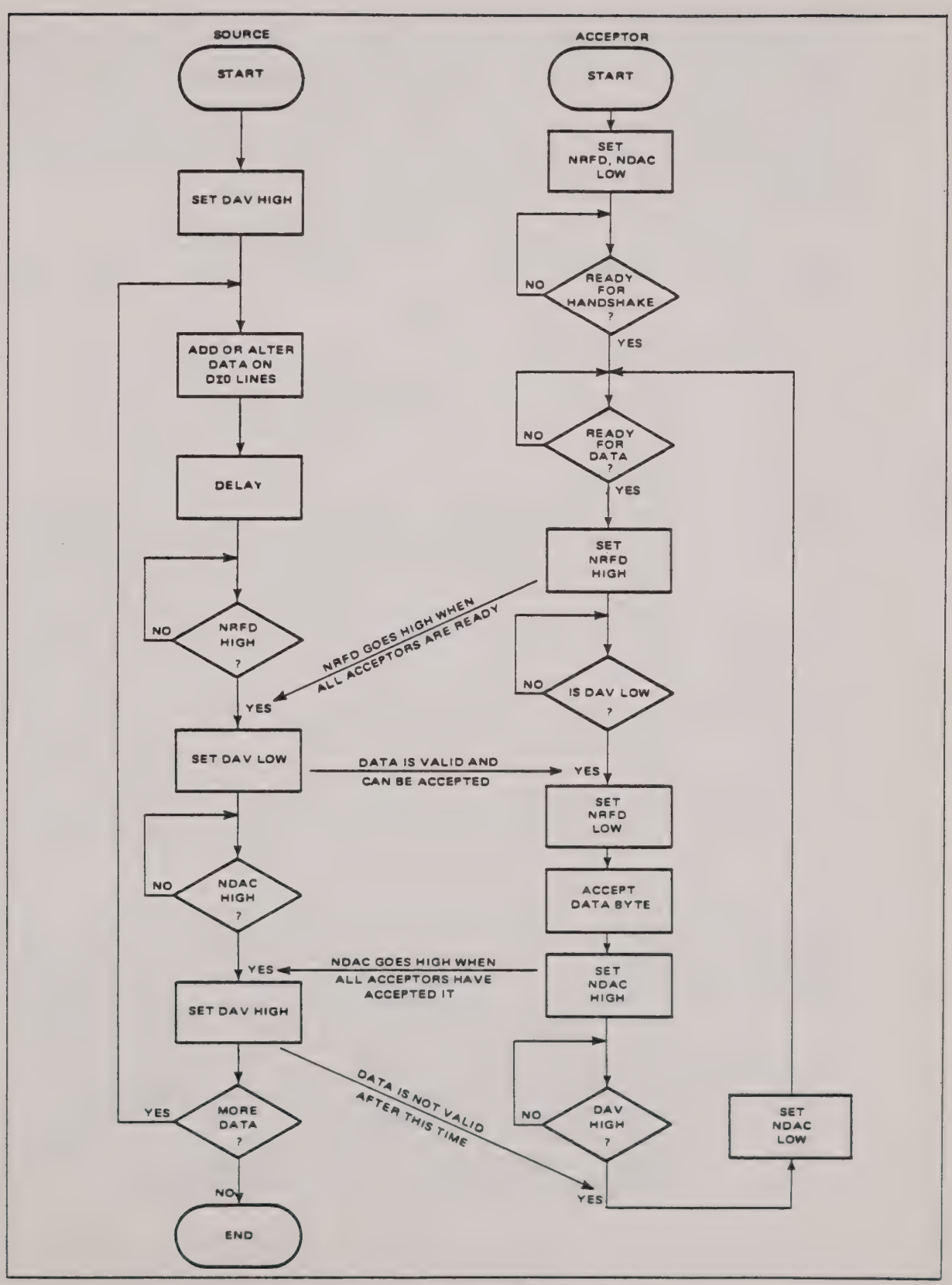

Figure 7.3 - Handshake Flow Chart

7.3.4.2 The handshake cycle itself refers to the transfer of data bytes bit-parallel and byte-serial in form, from the talker (source device) to the listener(s) (acceptor devices) over the GPIB. This data transmission occurs across the GPIB-Interface using an "interlocked" sequence of status and control signals. Here "interlocked" simply means that a fixed sequence of electrical events involving these status and control signals must occur. One event in the sequence, then, **must** occur before the next one **can** occur.

7.3.5 **Interface**

7.3.5.1 The following five interface lines coordinate the flow of information over the GPIB:

(a) Interface Clear

'IFC.' This signal line places the GPIB-Interface of the bus device in the Idle state (ie: Untalk, Unlisten).

(b) Attention

'ATN.' This signal line is activated only by the system controller prior to the initiation of a handshake sequence in order to gain the "attention" of GPIB devices. The signal indicates the kind of information on the data lines during a handshake transfer sequence. A low state signifies that the data lines carry interface commands; a high state indicates that the data lines carry device-dependent data.

(c) Remote Enable

'REN.' This signal line should be grounded permanently low for remote operation of GPIB members. All bus instruments are armed to select Remote Operation (low state) when REN is asserted over the GPIB-Interface by the system controller. (Should the REN line become high and return to the 0 state, all GPIB devices would revert to the local control mode.)

(d) Service Request

'SRQ.' This signal line alerts the controller that a bus member requires service from the controller for reasons such as transmitting measurement data, status or condition information to the system controller. Since the GPIB contains only one SRQ line, a low state may be the result of one or more bus members driving SRQ low. When the controller receives an SRQ signal from any bus member, the former initiates a serial poll of all GPIB devices, including the analyzer, to determine which bus unit(s) has requested controller service. Whenever the analyzer activates the SRQ signal line to indicate that it requires controller attention (eg: to output a ROM error message to the controller), the corresponding red LED on the front panel

illuminates. This occurs during both remote SRQ signal activation or when the operator uses the front-panel SRQ key during local operation. Refer to subsection 7.7.1.1 for a discussion of the SRQ key in local mode.

(e) End or Identify

'EOI.' This signal line is used for two purposes: (1) to signify the end of a message being transferred on the data lines from a talker to a listener(s) and (2) to inform all GPIB devices to set their assigned I/O bit for a parallel poll identification process.

NOTE

Models 202 and 205 state analyzers have no parallel poll capability.

7.4 GPIB-BUS ADDRESS ASSIGNMENT

7.4.1 Refer to Figure 3.2 on page 3-a showing the 202/205 GPIB address switches on the rear panel of the analyzer. When the logic analyzer is used as a system instrument, it must be assigned an address as a bus member. By such a unique address assignment, the controller or some other GPIB device can "call up" the analyzer without interfering with other bus instruments.

7.4.2 Both the 202 and 205 analyzers (the former having been option-fitted) are equipped with a set of address switches (S200-S205) on their rear panels enabling the operator to assign one of 31 decimal addresses to either instrument as well as select the TALK-ONLY mode. The decimal addresses available are the numbers 00 through 30 in binary format. Although there are 31 possible codes for setting the analyzer's GPIB address, only 15 devices (including the analyzer) can be operated on one bus at a time.

7.4.3 Table 7.2 contains all the required information for setting the analyzer address switches and determining the Talk and Listen address codes used in programming the controller.

7.4.4 In referring to Table 7.2, note that the right-hand column shows the decimal addresses available for assigning the analyzer as a bus member. The column headed "Address Switch Setting" indicates the positions of the switches for each available decimal address. To set the address for the analyzer, simply select the desired decimal address; then refer to Table 7.2 and set the switches on the GPIB Address Switch to match the address pattern shown in the "Address Switch Setting" column of the table.

7.4.5 The present GPIB decimal address for the analyzer is displayed along with the instrument's current hardware/software configuration when the UNIT menu key is pressed.

ASCII CHARACTERS		DATA LINES							ADDRESS SWITCH SETTING	DECIMAL ADDRESS
		D_7	D_6	D_5	D_4	D_3	D_2	D_1	TALK ONLY 1 / 0; A5 A4 A3 A2 A1	
TALK	LISTEN	TALK	LISTEN	ADDRESS						
				16	8	4	2	1		
@	SP	0	1	0	0	0	0	0		00
		1	0	0	0	0	0	0		
A	!	0	1	0	0	0	0	1		01
		1	0	0	0	0	0	1		
B	"	0	1	0	0	0	1	0		02
		1	0	0	0	0	1	0		
C	#	0	1	0	0	0	1	1		03
		1	0	0	0	0	1	1		
D	$	0	1	0	0	1	0	0		04
		1	0	0	0	1	0	0		
E	%	0	1	0	0	1	0	1		05
		1	0	0	0	1	0	1		
F	&	0	1	0	0	1	1	0		06
		1	0	0	0	1	1	0		
G	APOSTROPHE	0	1	0	0	1	1	1		07
		1	0	0	0	1	1	1		
H	(	0	1	0	1	0	0	0		08
		1	0	0	1	0	0	0		
I	)	0	1	0	1	0	0	1		09
		1	0	0	1	0	0	1		
J	*	0	1	0	1	0	1	0		10
		1	0	0	1	0	1	0		
K	+	0	1	0	1	0	1	1		11
		1	0	0	1	0	1	1		
L	,	0	1	0	1	1	0	0		12
		1	0	0	1	1	0	0		
M	-	0	1	0	1	1	0	1		13
		1	0	0	1	1	0	1		
N	.	0	1	0	1	1	1	0		14
		1	0	0	1	1	1	0		
O	/	0	1	0	1	1	1	1		15
		1	0	0	1	1	1	1		

ASCII CHARACTERS		DATA LINES							ADDRESS SWITCH SETTING	DECIMAL ADDRESS
		D_7	D_6	D_5	D_4	D_3	D_2	D_1	TALK ONLY 1 / 0; A5 A4 A3 A2 A1	
TALK	LISTEN	TALK	LISTEN	ADDRESS						
				16	8	4	2	1		
	Ø	0	1	1	0	0	0	0		16
P		1	0	1	0	0	0	0		
	1	0	1	1	0	0	0	1		17
Q		1	0	1	0	0	0	1		
	2	0	1	1	0	0	1	0		18
R		1	0	1	0	0	1	0		
	3	0	1	1	0	0	1	1		19
S		1	0	1	0	0	1	1		
	4	0	1	1	0	1	0	0		20
T		1	0	1	0	1	0	0		
	5	0	1	1	0	1	0	1		21
U		1	0	1	0	1	0	1		
	6	0	1	1	0	1	1	0		22
V		1	0	1	0	1	1	0		
	7	0	1	1	0	1	1	1		23
W		1	0	1	0	1	1	1		
	8	0	1	1	1	0	0	0		24
X		1	0	1	1	0	0	0		
	9	0	1	1	1	0	0	1		25
Y		1	0	1	1	0	0	1		
	:	0	1	1	1	0	1	0		26
Z		1	0	1	1	0	1	0		
	;	0	1	1	1	0	1	1		27
[		1	0	1	1	0	1	1		
	<	0	1	1	1	1	0	0		28
\		1	0	1	1	1	0	0		
	=	0	1	1	1	1	0	1		29
]		1	0	1	1	1	0	1		
	>	0	1	1	1	1	1	0		30
^		1	0	1	1	1	1	0		
NONE		ILLEGAL							NONE	31

Table 7.2 - 202/205 Address Selection

7.4.6 Once the analyzer has been assigned its GPIB address and the address switches set, the system controller may address the analyzer either as a Talker or as a Listener (illuminating the corresponding front-panel GPIB LED red) by transmitting the appropriate ASCII character on the data lines.

7.4.7 Refer again to Table 7.2 as required. Note that the Data Lines column shows the 7-bit binary code required for each Talk and Listen address assigned to the analyzer. These are the codes that the controller must transmit to establish the Talker/Listener condition of the logic analyzer. Also, observe that there are two address codes used for each decimal address. Each of these address codes constitutes a different ASCII character. For example, if decimal address "02" is required, the address switches on the rear panel of the analyzer are set to match the pattern shown in Table 7.2. This tabulation indicates that the Talk address is the ASCII character " and the Listen address is the ASCII character "B." Note that the only difference in the binary code in each case is the logic state of data lines D6 and D7.

7.4.8 Table 7.2 also illustrates the data line code in binary format for each decimal address. Again, using the decimal address "02" as an example, note that bits D1 through D5 are the same for both the Talk and Listen addresses with the only difference being in bits D6 and D7.

7.5 BUS OPERATION SEQUENCE

7.5.1 The transmission of programming instructions from the system controller, in the form of GPIB Program Commands (see subsection 7.8 starting on page 7-19 for further information), to the analyzer over the GPIB and the subsequent automatic analysis operations, including message reply outputs, are outlined in Table 7.3. This tabulation describes a typical bus operation sequence illustrating the transmission of a device-dependent command to the logic analyzer along with the resulting transfer of status information (reply to a Y2-coded Output Command in this example) back to the controller via the GPIB for analysis and further output as needed. Figure 7.4 depicts a timing display diagram up to the beginning of transmission of the Y2-coded Output Command (shown in Table 7.3 beginning at reference line 17). If Figure 7.4 was completed, it would show the entire bus sequence timing display. (Also, the system controller can write directly into the CRT to display operator instructions.)

7.5.2 Besides providing line-number references, Table 7.3 is organized into the following columns of information:

(a) "Handshake Lines" - indicating the high/low condition of the various signal lines at points throughout the two-way transmission of information.

(b) "Bus Lines" - indicating the state of the interface lines during the bus sequence.

(c) "Data Lines" - indicating the state of the data lines during the bus sequence.

(d) "Meaning/Function" - indicating the purpose of each operational step during the bus sequence.

Table 7.3 - Bus Operation Sequence

HANDSHAKE LINES	BUS LINES	DATA LINES	MEANING OR FUNCTION
1	REN Lo		Arms bus peripherals to go to remote mode.
2	IFC		Stops activity on the bus.
3	ATN Lo		Signifies that data byte will be a "Bus Message".
4 NRFD Hi			Analyzer says it's ready for data.
5		?	UNL (Unlisten) message (ASCII character ?) o data bus by controller means "all bus peripherals unlisten."
6 DAV Lo		?	Controller says data on bus is valid.
7 NRFD Lo		?	Analyzer says it's not ready for new data; o not change data lines while Analyzer is accepting data.
8		?	Analyzer reads data lines.
9 NDAC Hi		?	Analyzer says it has read data.
10 DAV Hi		?	Controller says data no longer valid.
11 NDAC Lo			Analyzer removes data accepted flag.
12 NRFD Hi			Analyzer says it's ready for next data byte.
13			Controller removes or changes data on bus.
14		U	"I talk", controller becomes talker (HP9825 talker address).
15		"	"You listen", addressed peripheral becomes listener. (In this case it is the analyzer set to decimal address 02; see table 7.2)
16	ATN Hi		Signifies that data byte will be a "Device Dependent Message" as opposed to an "Interface Message."
17		Y	
18		2	

Table 7.3 - Bus Operation Sequence (Continued)

HANDSHAKE LINES		BUS LINES	DATA LINES	MEANING OR FUNCTION
19			CR	End of transmission by HP9825.
20			LF	
21		ATN Lo		Byte to follow is a Bus Message.
22			?	UNL (unlisten) bus message.
23			B	"You talk", Analyzer talk address (02).
24			5	"I listen", HP9825 listen address.
25		ATN Hi		Message to be transmitted by Analyzer is Data.
26			S	"Busy-Status" Output by the Logic Analyzer is 6, signifying that the Analyzer is Not Running; Trigger Found.
27			T	
28			A	
29			T	
30			U	
31			S	
32			=	
33			6	
34			CR	End of "Output Message" (EOI Line asserted concurrently)
35		EOI Lo	LF	

7.5.3 The GPIB-Interface Timing diagram, shown in Figure 7.4, shows the condition of each individual bus line at each stage of the data transfer operation. Observe that the timing diagram includes reference numbers adjacent to each level of change. These numbers correspond to the individual line entries of Table 7.3.

7.5.4 In examining the representative GPIB operating sequence presented in Table 7.3, the operator should assume that the logic analyzer has been assigned a decimal address of "02" and that the HP9825 controller has a talk address of "U." It is further assumed that both the controller and analyzer are system-connected, turned on and operational.

7.5.5 Table 7.3 shows a GPIB Program Command requiring a Message Output indicating the GPIB's "Busy Status." As noted in lines 17 through 20 of the table, the program string required to perform this command operation and output the reply is "Y2 CR LF" (the quotation marks not being part of the string; the "CR" and "LF" being required terminators). In this case, the necessary terminators are automatically transmitted by the HP9825.

7.5.6 Lines 1 through 12 show in detail the GPIB operation for one handshake sequence (ie: the transmission of one ASCII character as a bus message). Lines 14 through 35 do not indicate the detail for each handshake sequence, rather they show only the transmission of those characters required for the GPIB Program Command and subsequent reply of its corresponding Message Output. Each transmission by either the system controller or logic analyzer, as indicated by the sample Program Command and its resulting Message Output shown in lines 14 through 35, requires the handshake sequence shown in line entries 1 through 12 of the table.

7.5.7 Refer to line 1 of Table 7.3 and note that the first operation performed is the setting of the Remote Enable (REN) line to the low state. As explained in the table, this arms bus members to go to the remote mode of operation. Next, the controller transmits the Interface Clear (IFC) signal which stops bus activity (2) and, then, the Attention (ATN) line is set low (3) indicating that the next data byte placed on the GPIB by the controller will be a GPIB-Interface message. Note in the timing diagram (see Figure 7.4) that when the ATN line is set low that the analyzer responds by setting the NRFD line high (4). This response by the analyzer indicates that it is now ready to accept data.

7.5.8 When the analyzer transmits the "ready for data" signal by setting the NRFD line high, the controller puts the UNL (Unlisten) Command on the data lines (5). This GPIB message is signified by the ASCII character "?". This "Unlisten" message is a universal one understood by all bus members. Having placed this data character on the bus, the controller now says the data is valid by setting the DAV line low (6).

7.5.9 The analyzer, in turn, says "I'm going to accept the data presently on the data lines; don't change the data lines" (7). The analyzer then reads the data lines (8) and acknowledges its acceptance of the data on the bus by setting the NDAC line high (9). The controller then removes the data valid signal by settng the DAV line high (10) and removes or changes the data on the bus (13), after the analyzer has already removed the data accepted signal (11) and indicated that it is ready for the next data byte (12).

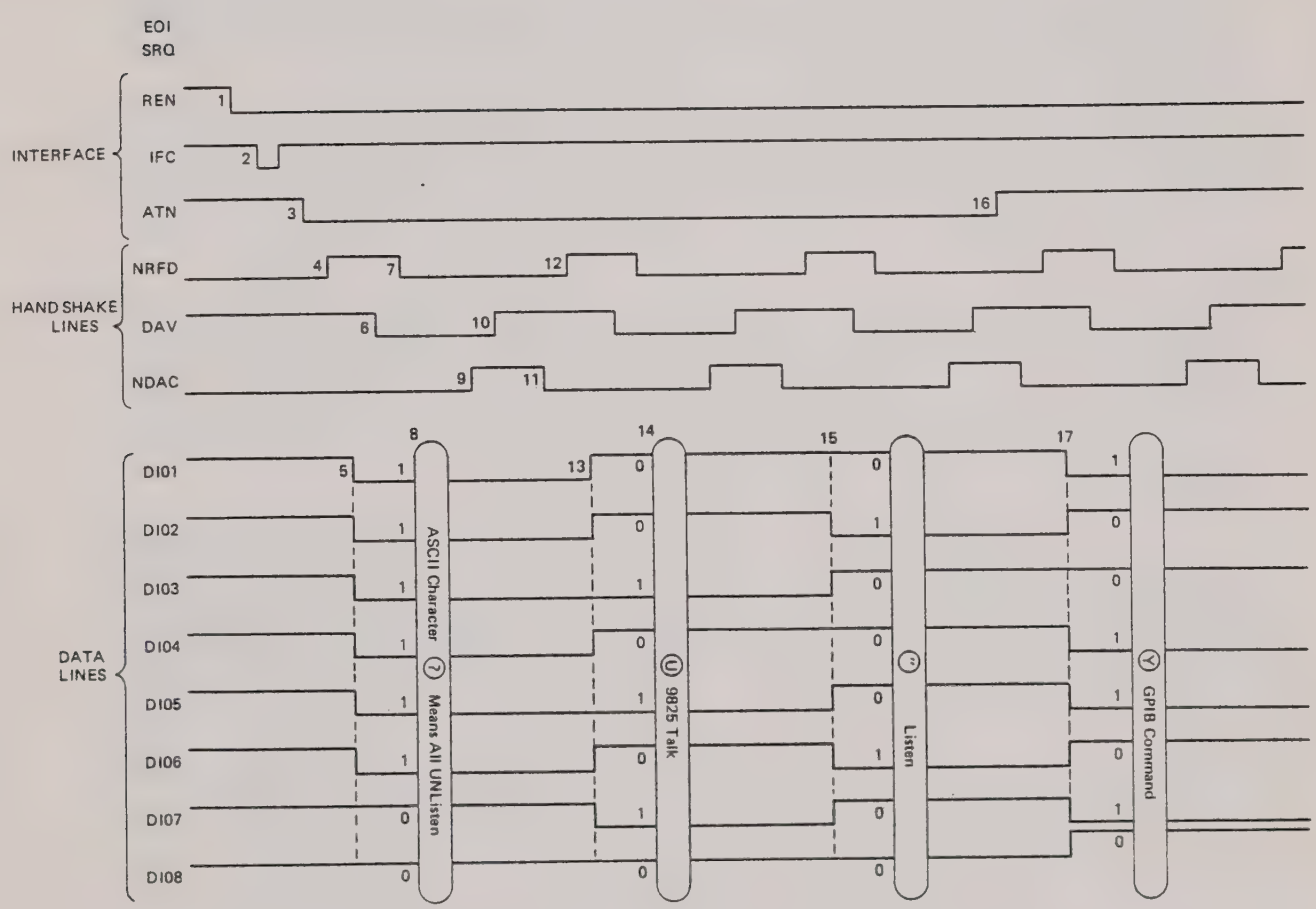

Figure 7.4 - 202/205 Interface Timing

7.5.10 At this point, one ASCII character has been transmitted by the controller to the logic analyzer and the analyzer affirms that it is ready to accept new data, indicated by setting the NRFD line high (12).

7.5.11 The controller now puts the next character on the data bus lines and the handshake cycle for transferring the character is repeated. This next character transmitted by the controller is the ASCII character "U" (14) which is the talk address of the HP9825 controller. As noted in Table 7.3, by transmitting this character the controller makes itself a talker. The next character transmitted is the quotation mark (15) which is the listen address of the analyzer when it has been assigned the decimal address "02."

7.5.12 Lines 16 through 20 of the table indicate the sequence for transmitting the GPIB Program Command string which instructs the analyzer, in the example illustrated, to report its "Busy-Status" in the form of a Message Output. Line 16 shows the controller first setting the ATN line high signifying that the program string to follow in lines 17 through 20 would be a device-dependent message.

7.5.13 Having transmitted the program string to the analyzer, the controller next sets the ATN line low (21). This signifies that the characters to follow in lines 22 through 24 will be GPIB-Interface messages, not device-dependent ones. These messages change the Talker/Listener relationship of the controller and analyzer with the analyzer being made a talker and the controller being made a listener. Line 25 of the table shows the ATN line being set high again, indicating that the analyzer will transmit a device-dependent message over the GPIB.

7.5.14 Lines 26 through 35 indicate the "Busy-Status" Output reply by the analyzer over the GPIB to the controller. It is in response to the previously-sent GPIB Command program string "Y2 CR LF". The handshake sequence for this data transmission is the same as when the controller was transmitting data over the GPIB (lines 1 through 12), except that now the logic analyzer controls the handshake lines.

7.5.15 Upon completion of the data output, the analyzer transmits a carriage return (CR) and line feed (LF) character indicating the end of data transmission. (The EOI line is asserted concurrently with the LF character.)

7.6 INTERFACE MESSAGE REPERTOIRE

7.6.1 The logic analyzer is equipped with a standard GPIB interface which conforms to the specifications contained in IEEE-488-1978. The specification includes the definition of multi-line interface messages and this definition divides the messages into two groups: the primary command group and secondary command group. Models 202/205 analyzers include none of the secondary command group in its Interface Message Repertoire.

7.6.2 The primary command group of interface messages is further divided into four lower categories: (1) the Listen Address group, (2) the Talk Address group, (3) the Universal Command group and (4) the Addressed Command group. The 202/205 are designed to include in its Interface Message Repertoire 31 Listen Addresses and 31 Talk Addresses to which the analyzer may be set according to Table 7.2.

7.6.3 The interface messages to which 202/205 analyzers are designed to respond to are listed in Table 7.4 along with their hexadecimal and decimal equivalents, meanings and data line codes. The operation of 202/205 analyzers in response to each of these commands is described in the following subsections.

(a) Go To Local

'GTL.' As shown in Table 7.4, the GTL Command means "go to local" and the decimal and hex equivalents are both 01. Upon receipt of this interface message, the logic analyzer, if previously programmed for remote operation, will return to its local state. This means that the instrument will then perform the analyzer function(s) according to settings on the front-panel keyboard until the unit is returned to remote operation again.

(b) Selected Device Clear

'SDC.' Upon receipt of the SDC Command, the analyzer will return to its home state if it is a Listener on the bus. The decimal and hex equivalents are both 04.

Table 7.4 - Interface Messages Used With Model 202/205 Analyzers

Message	Meaning	HEX CODE	Decimal Equiv.	DATA LINE CODE						
				7	6	5	4	3	2	1
GTL	Go To Local	01	1	0	0	0	0	0	0	1
SDC*	Selected Device Clear	04	4	0	0	0	0	1	0	0
GET*	Group Execute Trigger	08	8	0	0	0	1	0	0	0
LLO	Local Lock Out	11	17	0	0	1	0	0	0	1
DCL	Device Clear	14	20	0	0	1	0	1	0	0
SPE	Serial Poll Enable	18	24	0	0	1	1	0	0	0
SPD	Serial Poll Disable	19	25	0	0	1	1	0	0	1
UNL	Unlisten	3F	63	0	1	1	1	1	1	1
UNT	Untalk	5F	95	1	0	1	1	1	1	1

*Instrument will ignore message unless it is a listener

(c) Group Execute Trigger

'GET.' As shown in Table 7.4, the decimal and hex equivalents of the GET Command are both 08. Upon receipt of the GET interface message, the analyzer, since it can function as a Listener on the bus, will trigger a reading. The GET Command is used to trigger the simultaneous execution of a number of operations by a number of bus devices. To use this command, one or more bus members, like the analyzer, are programmed to perform a function on receiving the GET interface message. Subsequently, the controller will transmit the GET command and all bus members previously programmed will begin execution upon receipt of the command.

(d) Local Lock Out

'LLO.' The analyzer may be brought back into local control by pressing the LOCAL key in the GPIB group. However, if the analyzer receives a LLO Command (Hex 11 or Decimal 17) while in remote operation, it cannot be brought back into local control via front-panel keyboard operation.

(e) Device Clear

'DCL.' The hex code and decimal equivalents for the DCL Command are 14 and 20, respectively. This command is identical in operation to the SDC Command except that the analyzer need not be a Listener on the bus in order to respond. When the DCL Command is issued over the bus, all devices which respond to this message will return to their home states.

(f) Serial Poll Enable

'SPE.' As shown in Table 7.4, the hex code is 18; the decimal equivalent is 24. This command functions by notifying all bus members that they should output their serial poll status when made a Talker. Therefore, when a bus device, like the logic analyzer, has transmitted a Service Request (SRQ) Command, the controller transmits the SPE Command to each bus member. The SPE Command requires each GPIB device to output its status byte sequentially as each device is made a Talker, permitting the controller to determine which device requested service. When either the 202 or 205 receives its Talk address and SPE Command, the analyzer immediately prepares its status byte for transmission to the controller. If the analyzer had previously transmitted an SRQ Command, the instrument will set bit 7 of its serial poll output (ie: bit 7 of its status byte) to 1. The serial poll output permits any bus member including the analyzer, to set the SRQ signal line to the 1 state, informing the controller that it needs attention. The controller then sequentially interrogates each bus member to determine which GPIB device requested the service and the purpose of the request. The meanings of the various bits comprising the single status byte are shown in Figure 7.5 on page 7-17.

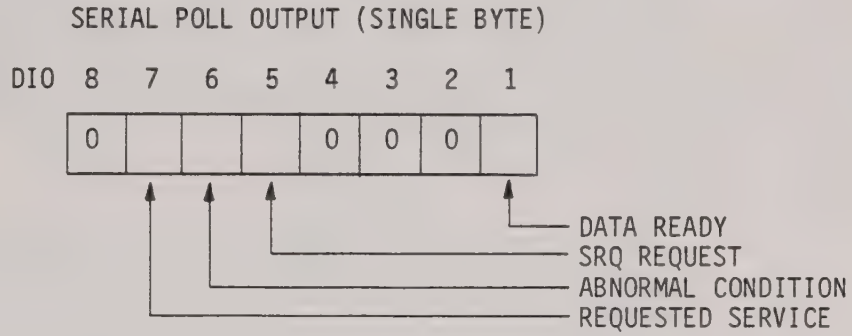

NOTES: Bit 1 - 0 signifies "Data Not Ready," informing the operator to retrieve the "Busy-Status" Output using the Y2 Program Command; 1 signifies "Data Ready," informing the operator to employ either an X1 or X0 (with or without an SRQ Command, respectively) Program Command to execute a run on completing data collection.

Bits 2, 3 and 4 are not used.

Bit 5 - 0 signifies "SRQ Command Request Not Made"; 1 signifies "SRQ Command Request Made." The SRQ Command Request has been made by the local operator. The controller can retrieve the SRQ Number (00-99 range) using the Y1 Program Command.

Bit 6 - 0 signifies "Normal Condition"; 1 signifies "Abnormal Condition." The operator can retrieve the Output Error Message in ASCII format using the Y0 Program Command.

Bit 7 - 0 signifies if an SRQ Command Request has not been transmitted; 1 signifies if an SRQ Command has been transmitted by the 202/205 analyzer.

Figure 7.5 - 202/205 Serial Poll Enable (SPE) Output

(g) Serial Poll Disable

'SPD.' As shown in Table 7.4, the Hex code is 19 and the Decimal equivalent is 25 for this interface command. The purpose of this command is to return the bus members to their original states after the serial poll transaction has been completed.

(h) Unlisten

'UNL.' The Hex Code for this command is 3F; the Decimal Equivalent is 63. This command is a universal interface message understood by all members of the bus as a command to go to the Unlisten state. When this command is transmitted, all bus members previously in the Listen state will return to the Unlisten state.

(i) Untalk

'UNT." The Hex Code for this command is 5F; the Decimal Equivalent is 95. This command is also a universal interface message understood by all members of the bus to be a command to go to the Untalk state. When this command is transmitted, all bus members previously in the Talk state will return to the Untalk state.

7.7 GPIB KEY FUNCTIONS

7.7.1 The three GPIB operation keys on the 202 (option-fitted) and 205 analyzers are located on the front panel of the instrument as a green color-coded keyboard group. A brief description of each GPIB function key follows in the next several subsections.

7.7.1.1 The SRQ key described here applies only to operation in local mode. Refer to pages 7-6 to 7-7 for a description of this key in remote mode. After the operator presses the SRQ key, the CRT display flashes the following message as an operator advisory: "SRQ KEY INPUT ACTIVE." The following is a flow diagram showing what occurs when the SRQ signal line is asserted from the front-panel keyboard.

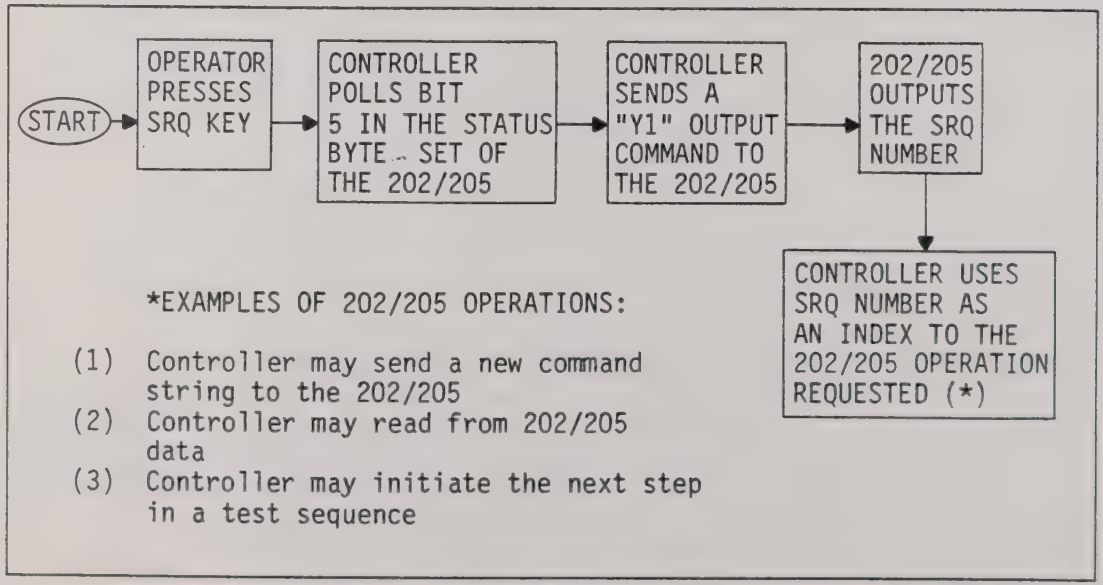

Figure 7.6 - SRQ Operation from Front Keyboard

In addition, Figure 7.7 below shows the Syntax Diagram for SRQ Key Operation.

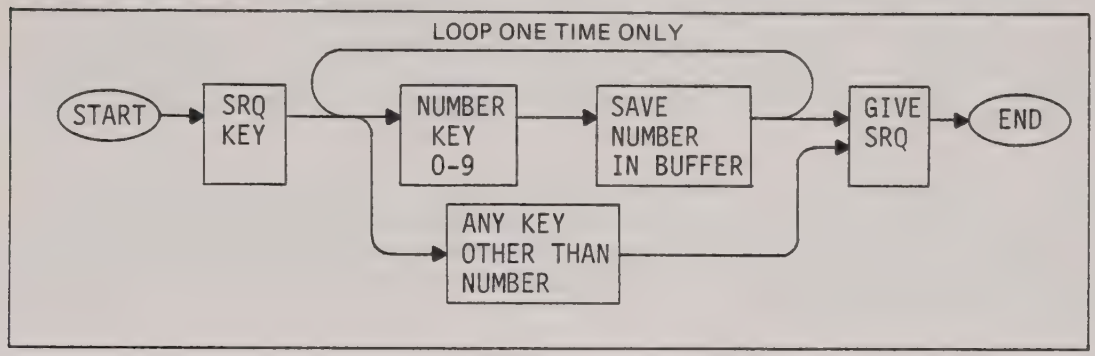

Figure 7.7 - SRQ Syntax Diagram (Local Operation)

7.7.1.2 The **HALT** key terminates output when in the local Talk-Only Mode. Also, this key provides a convenient means for the local operator to halt a large printout after a data acquisition run.

7.7.1.3 The **LOCAL** key transfers control to a local operator if local lockout (LLO) has not been asserted. Use of the local key always returns the analyzer to the Mode Menu.

7.8 DEVICE-DEPENDENT GPIB COMMANDS

7.8.1 Device-dependent GPIB Commands, assembled as coded program strings, control the operation of 202/205 logic analyzers when in system operation. GPIB Program Commands can be either input commands or output commands. Both sets of Program Commands are composed of combinations of ASCII characters which the analyzer recognizes as specific instructions. Table 7.5 provides a tabulation of the input commands; Table 7.6 provides a similar tabulation of the output commands.

7.8.2 To program the 202/205 for a particular operation, the user programs the controller to transmit a sequence of these GPIB Commands to the analyzer. In general, the various GPIB Commands permit the analyzer to perform in a remote mode the same analyzer operations that can be carried out locally using the various front-panel key groups.

7.8.3 Each sequence of GPIB Program Commands is formatted using a specified set of program string delimiters and terminators. These are listed in the first tabulation of Table 7.5 to which the operator is referred. Mandatory terminators for 202/205 Commands are CR and LF (Carriage Return and Line Feed, respectively) characters. Most controllers, like the HP9825, automatically add the required terminators to the command. Finally, in assembling the various program strings for the GPIB Commands, either upper or lower case alphabetic characters may be employed.

7.8.4 Tables 7.5 and 7.6 list all GPIB Program Commands (both input and output messages, respectively) indicating specific GPIB/analyzer interface operation, function codes and any applicable special notes. These commands are grouped into 14 categories of input messages and 4 categories of output messages. As an assist to the user, several Program Command categories requiring rather complex string assembly are supplied with syntax diagrams within their table. Finally, refer to Table 7.7 on page 7-38 which lists all the Error Code Messages that are output using the Y-O GPIB Command.

7.8.5 To assemble a particular GPIB Program Command, first list the requirements of the program, and then select the appropriate program code(s) from Tables 7.5 and 7.6 on the following pages. As necessary, refer back to Table 7.3 (see pages 7-10 to 7-11) showing a representative bus sequence for a GPIB Program Command and Output Message.

7.9 TALK-ONLY MODE

7.9.1 With the analyzer's address switch set to the Talk-Only mode, the data output format is identical to the format transmitted in response to a "PO" command.

Table 7.5 - 202/205 **INPUT** GPIB Program Commands

Command Delimiters/ Terminators	SP	;	Reserved Letter	CR	LF	,
Intra-Msg.	X	X				X
Inter-Msg.	X	X	X			X
Complete Input Msg.				X	X	

ANALYZER MODE COMMANDS

OPERATION	CODE
Normal Arm	A0
Auto Arm	A1 * Pause
Stop On Equal	A2 * Depth
Stop On Not Equal	A3 * Depth

NOTES: * signifies that an optional intra-message delimiter is allowed.

Pause = an ASCII-formatted decimal number with a range of 0 to 999 (sec) in standard floating point (without exponent) format.

Depth = an ASCII-formatted decimal number with a range of 1 to 250 in standard floating point (without exponent) format.

Table 7.5 - 202/205 **INPUT** GPIB Program Commands (Continued)

VOLATILE MEMORY COMMANDS	
OPERATION	CODE
Store Menus to Volatile Memory	B0
Recall Menus from Volatile Memory	B1
Output from Volatile Memory (Output starts when S-200 unit is made a talker)	B2
Input to Volatile Memory	B3 Binary String

NOTE: Binary String signifies a string of 257 bytes including 255 data bytes with a 2 byte checksum. This string has the format as that output by Command B2.

TRIGGER DELAY COMMANDS	
OPERATION	CODE
Trigger Delay OFF	D0
Trigger Delay ON by Clocks	D1 * Amount
Trigger Delay ON by Events	D2 * Amount
Arm 1 Delay OFF	D3
Arm 1 Delay ON by Clocks	D4 * Amount
Arm 1 Delay ON by Events	D5 * Amount
Auto Add OFF	D6
Auto Add ON (trigger delay must be on)	D7 * Amount

NOTES: * Signifies that an optional intra-message delimiter is allowed.

Amount = an ASCII-formatted decimal number with a range of 0 to 1,048,575 in standard floating point (without exponent) format.

Table 7.5 - 202/205 **INPUT** GPIB Program Commands (Continued)

GPIB CRT SCREEN COMMANDS	
OPERATION	CODE
Clear CRT Screen and Disable the GPIB Display	G0
Display the GPIB Command String (at GPIB Input) on the CRT Screen at the Top	G1
Display GPIB String Data on CRT Screen until a ";" is received as the Terminator	G2 String;
HALT COMMAND	
OPERATION	CODE
Forced Halt (same as STOP key)	H
TIME INTERVAL COMMANDS	
OPERATION	CODE
Interval OFF	I0
Interval ON by Events, using Data Clock	I1
Interval ON by Time, with Range set by Internal Clock (using the K0 Command)	I2

Table 7.5 - 202/205 **INPUT** GPIB Program Commands (Continued)

CLOCK COMMANDS	
OPERATION	CODE
Internal Clock Set	K0 * Range * Number
Internal Clock Common	K1
External Clock Common	K2
External Clock Multiplex	K3

NOTES: *signifies that an optional intra-message delimiter is allowed.

Range = 0, 1, 2 and 3 for Sec, mSec, μSec and nSec, respectively.

Number = an ASCII-formatted decimal number with a range of 1 to 999 in standard floating point (without exponent) format, but with only 100, 200 or 500 available in the nSec range (3); 100 nSec is unavailable when the Word Generator is being used.

Table 7.5 - 202/205 **INPUT** GPIB Program Commands (Continued)

MEMORY LOAD COMMANDS	
OPERATION	CODE
Store Main to Auxiliary Memory	LO
Load Auxiliary Memory from GPIB	L1 String 1
Load Word Generator Memory from GPIB	L2 String 2
Load Word Generator Memory from an Internal Pattern	L3
Load Word Generator Memory from the User ROM	L4 * Offset

NOTES: * signifies that an optional intra-message delimiter is allowed.

String 1 = string output in binary format from the Print Main Data (P2) and Print Compare Data (P3) Print Data Command.

String 2 = string output in binary format from the Print Word Generator Data (P4) Print Data Command.

Offset = an ASCII-formatted decimal number with a range of 0 to 2047 in standard floating point (without exponent) format.

MASK WORD COMMANDS	
OPERATION	CODE
Turn OFF Masking	MO
Set Mask Word for Arm 1	M1 * String
Set Mask Word for Arm 2	M2 * String
Set Mask Word for Arm 3	M3 * String
Set Mask Word for Trigger	M4 * String

NOTES: * signifies that an optional intra-message delimiter is allowed.

For the String format refer to the Trigger Word Syntax Diagram (see page 7-27).

Table 7.5 - 202/205 **INPUT** GPIB Program Commands (Continued)

PROBE SETUP COMMANDS	
PROBE DESIGNATION	CODE
Probe A	Q0 * XXXX
Probe B, C	Q1 * XXXX
Set Analyzer to Present Probe Configuration	Q2

NOTES: Signifies that an optional intra-message delimiter is allowed.

X X X X

- Trigger Qualifier: 0 = 0 Qual, 1 = 1 Qual, 2 = Don't Care
- Clock Qualifier: same as for Trigger Qualifier
- Clock Slope: 0 = Positive, 1 = Negative
- Input Logic: + = Positive, - = Negative

RESET COMMAND	
OPERATION	CODE
Resets Menus to Power-on State (preserving all data memories) and Resets Run Counter to 0	R

MENU DISPLAY COMMANDS	
OPERATION	CODE
Mode Menu Display	S0
Input Menu Display	S1
Trigger Menu Display	S2
Delay Menu Display	S3
Word Generator Menu Display	S4
Unit Configuration Display	S5

Table 7.5 - 202/205 **INPUT** GPIB Program Commands (Continued)

TRIGGER COMMANDS	
OPERATION	CODE
Cancel Arm Words and Turn Restart OFF	T0
Set Arm Word 1	T1 * String
Set Arm Word 2	T2 * String
Set Arm Word 3	T3 * String
Set Trigger Word	T4 * String
Set Restart Word	T5 * String
Set for a Normal Run with an Option for Pre-Trigger	T6 * Pre-Trig
Set for a Trace Run with an Option for Post-Trace Counter	T7 * Post-Trace

NOTES: * signifies that an optional intra-message delimiter is allowed.

String = channels to be loaded (+), with required intra-message delimiter and Hex-ASCII-formatted words in alphabetical order. Refer to the Trigger/Arm Word Syntax Diagrams (A,B) on pages 7-28 and 7-29. The following are three examples of typical inputs:

1. Mask Level active is only equal to the present Arm Level active. That is, if Arm Level 2 is active, Mask Level will also be 2.

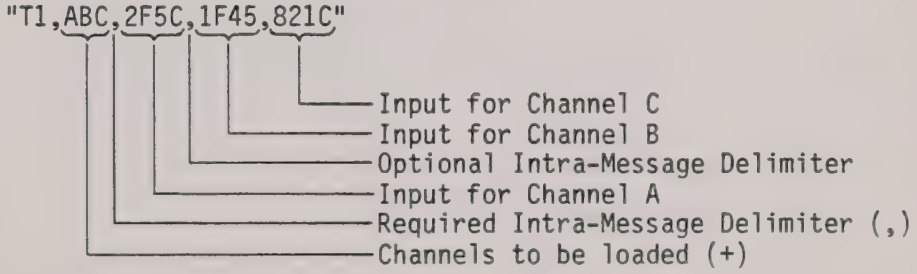

"T2;BC;1F45821C"

- Inputs for Channels B and C without Optional Intra-Message Delimiter
- Required Intra-Message Delimiter (;)
- Channels to be Loaded (+)

"T4C FAD1"

- Input for Channel C
- Required Intra-Message Delimiter (Space)
- Channel to be Loaded (+)

Pre-Trig = an ASCII formatted decimal number with a range of 0 to 250 in standard floating point (without exponent) format

Post-Trace = an ASCII-formatted decimal number with a range of 0 to 16 in standard floating point (without exponent) format; 0 for "Post-Trace" turns this function off

+ signifies that the only combinations of channels that can be loaded are A, B, C, AB, AC, BC and ABC. Refer to the Trigger/Arm Word Syntax Diagrams (A,B) below and on the next page.

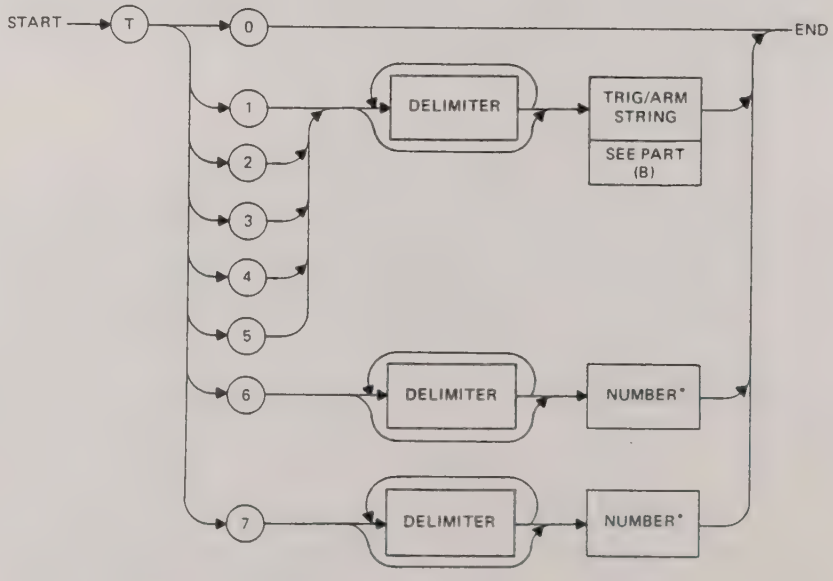

(A)

Table 7.5 - 202/205 **INPUT** GPIB Program Commands (Continued)

TRIGGER/ARM STRING FOR PART (A)

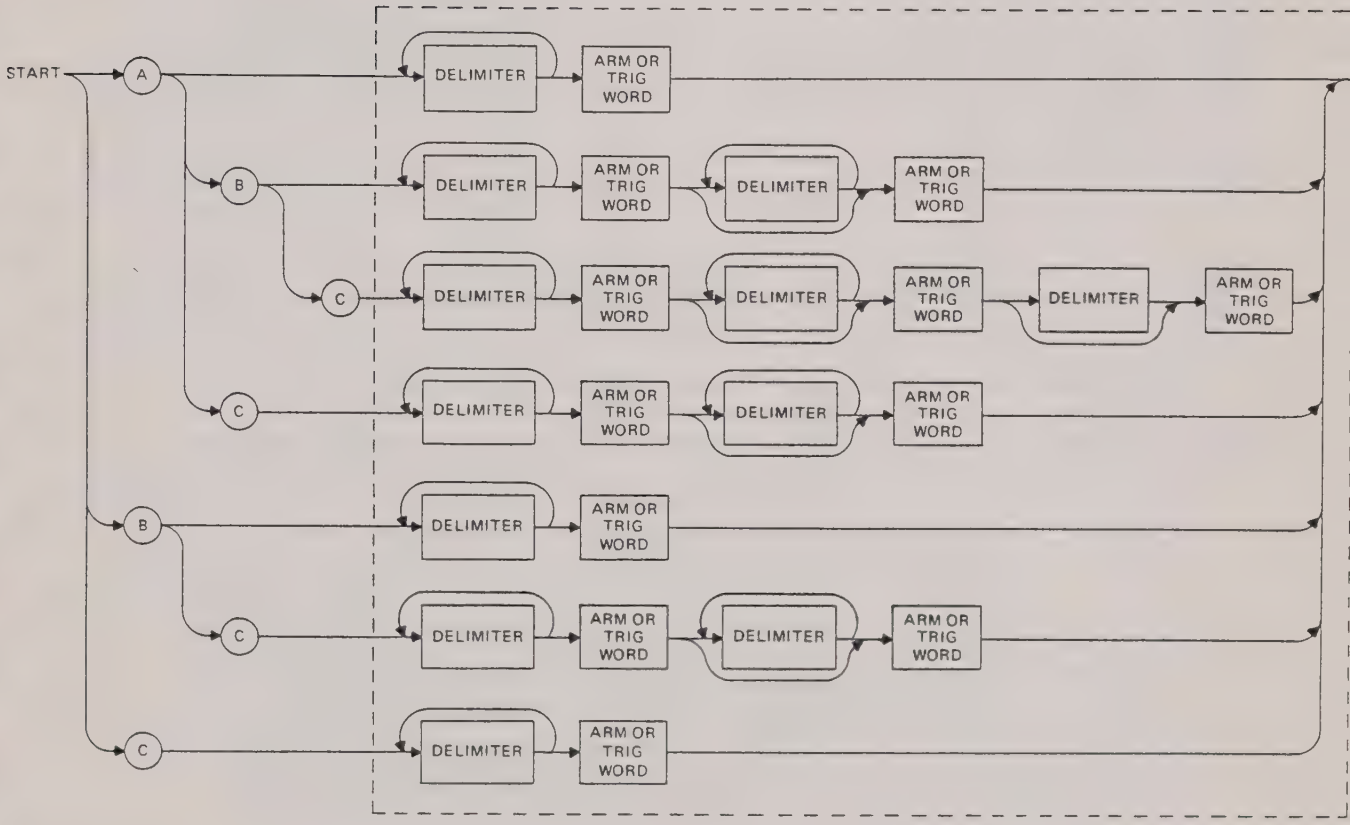

(B)

Table 7.5 - 202/205 **INPUT** GPIB Program Commands (Continued)

Word Generator Commands

Operation	Code
Step for a Single Word Mode	W0
Continuous Run Mode	W1 * Start, Length
Single Cycle Mode	W2 * Start, Length
Single Word Mode	W3 * Start, Length
Internal Clock	W4
External Clock	
+ Slope	W50
- Slope	W51

NOTES: * signifies that an optional intra-message delimiter is allowed.

Start = an ASCII-formatted decimal number with a range of 1 to 250 in standard floating point (without exponent) format.

Length = an ASCII-formatted decimal number with a range of 1 to 250 in standard floating point (without exponent) format.

An intra-message delimiter is mandatory between the "Start" and "Length" for the W1-W3 code Commands.

Table 7.5 - 202/205 **INPUT** GPIB Program Commands (Continued)

EXECUTE RUN COMMANDS	
OPERATION	CODE
Run Without SRQ on Completion of Data Collection	X0
Run With SRQ on Completion of Data Collection	X1
Compare Run Without SRQ on Completing Data Collection	X2
Compare Run With SRQ on Completing Data Collection	X3

NOTES: The X2 and X3-coded Compare Run Commands must be used in conjunction with either A2 or A3-coded Commands.

All input program strings for GPIB Commands should have the code for Execute Run Commands (X0-X3) last.

NOTE

All of the following Output Commands listed in Table 7.6 permit an output after conducting a data acquisition run (eg: using one of the Execute Run Commands, X0-X3). However, those Output Commands whose codes are designated by an asterisk (*) represent a special subset, permitting an output only on completing a data acquisition run or terminating a run using the Halt Command (H). The asterisk (*) is not part of the program string.

Table 7.6 - 202/205 **OUTPUT** GPIB Program Commands

COMPARE COMMAND

OPERATION	INPUT CODE	OUTPUT STATUS	OUTPUT CODE
Main to Auxiliary Memory Comparison	*C	Not Equal Equal N/A (+)	0 1 2

NOTE: N/A indicates that no data is stored in either the main or auxiliary memory.

OUTPUT INTERVAL COMMAND

OPERATION	CODE
Output Interval to the GPIB	*I3

NOTES: The format for the Output Interval is the same as that displayed on the CRT screen with clocks/events output as integers, and time (in seconds) output as fixed point numbers. For example, "S XXX X.XXX" or "C XXXXXXXX." are both valid outputs showing the floating decimal and the constant 7-digit number where S equals time and C equals clocks/events. Refer to the following Output Interval Command Syntax Diagram:

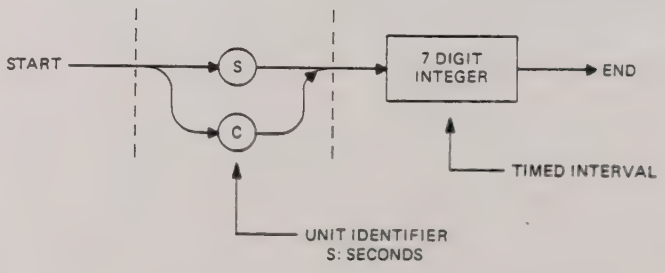

Table 7.6 - 202/205 **OUTPUT** GPIB Program Commands (Continued)

PRINT DATA COMMANDS	
OPERATION	CODE
Print Main Memory Data in CRT Screen Format	*P0
Print Auxiliary Memory Data In CRT Screen Format	P1
Print Main Memory Data in fast Binary Format (see notes below)	*P2
Print Auxiliary Memory Data in fast Binary Format (see notes below)	P3
Print Word Generator Memory Data in fast Binary Format	P4
Print Probe Configuration	P5
Print Run Counter	P6
Print Data Signatures	*P7

NOTES: P0 Output Format - Main Memory Data output is the same as the local data display on the CRT screen with each output line (up to 255 lines) terminated by CR LF characters. The EOI line is asserted concurrently with LF.

P1 Output Format - Auxiliary Memory Data output has the same format as Command code P0 except that auxiliary memory data is transmitted.

P2 Output Format - Main Memory Data, from Inputs A-C, are transmitted in 1500 8-bit binary-formatted bytes. The output of data is in alphabetic sequence by Input letter, followed by 24 bytes of internal machine state data, a 2-byte checksum and the required two terminators. A total of 1526 bytes are always output (null bytes being used for uncollected data or nonutilized channels). The 1526 bytes are comprised of (1) 1500 data bytes (AABBCC or 6 bytes/line x 250 lines), (2) 24 machine state bytes and (3) the 2 checksum bytes. A typical data output would be "$A_1A_1B_1B_1C_1C_1A_2A_2B_2B_2C_2C_2 \ldots A_{250}A_{250}B_{250}B_{250}C_{250}C_{250}M_1M_2 \ldots M_{24}CKSM_1CKSM_2$" with the EOI asserted with the second checksum byte.

P3 Output Format - Auxiliary Memory Data, from Inputs A-C, are transmitted in 1500 8-bit binary-formatted bytes as Command code P2, except that auxiliary memory data is output. Refer to the P2/P3-coded Syntax Diagram shown below:

Table 7.6 - 202/205 **OUTPUT** GPIB Program Commands (Continued)

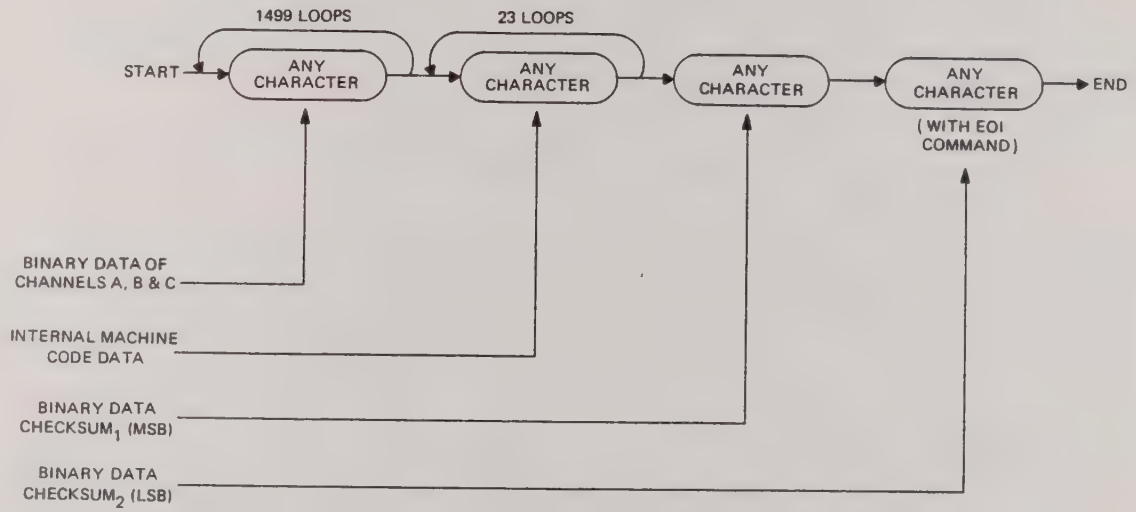

P4 Output Format - Word Generator Memory Data is transmitted in 1500 8-bit binary-formatted bytes. The output of data is in the following sequence: Partition Start (Start-Number in ASCII format, 000-249), Partition Length (Number in ASCII format, 001-250), Word Generator data in binary (500 bytes), 2 byte checksum, providing a total of 510 bytes of data. A typical data output would be "000,250,$W_1 W_2 W_3 \ldots W_{500}$ CKSM,$CKSM_2$" with the EOI asserted with the second byte of checksum. Refer to the P4-coded Syntax Diagram on page 7-35.

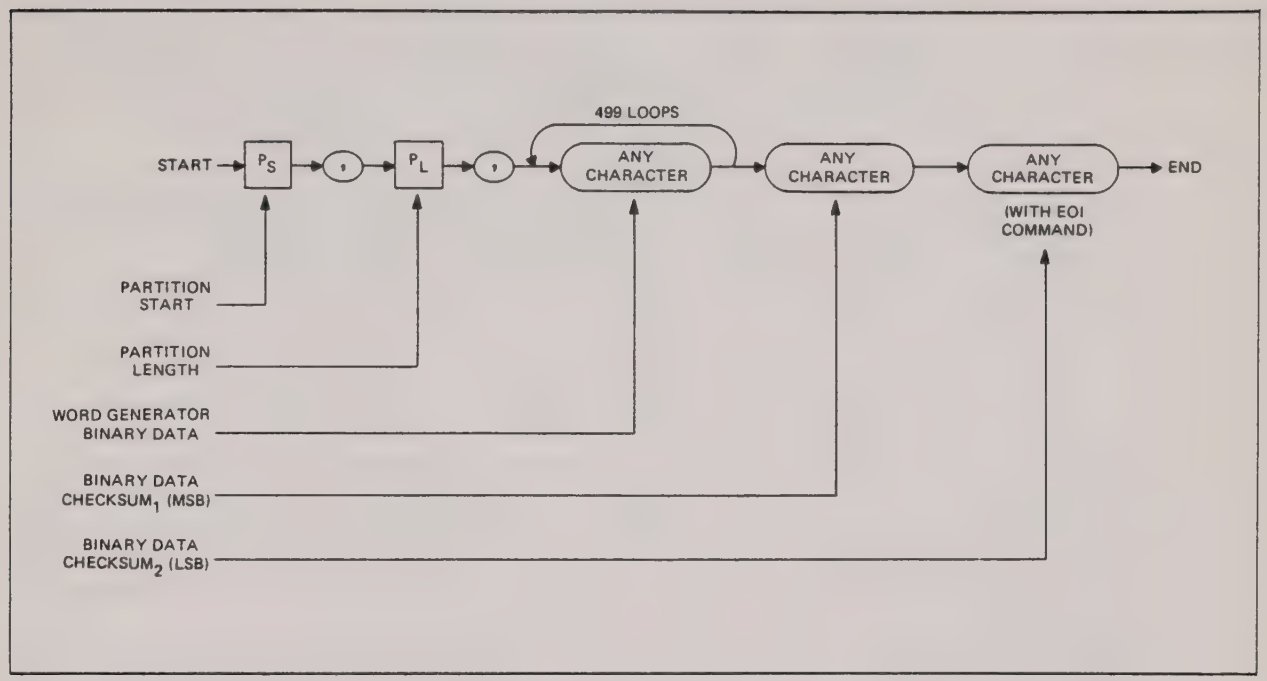

P5 Output Format - the current Probe Configuration of the Main and Auxiliary Memory setups is transmitted in the following format "AA,BB,CC,XX,YY,ZZ CR LF" with the EOI asserted concurrently with the LF character, and where the probe designators are 2-digit numbers from 00 to 99 (00 = no probe). In the above output, "AA" "BB" "CC" "XX" "YY" "ZZ" are the Probe Numbers for Channel A Main, Channel B Main, Channel C Main, Channel A Auxiliary, Channel B Auxiliary and Channel C Auxiliary Memories, respectively. Refer to the P5-coded Syntax Diagram shown below:

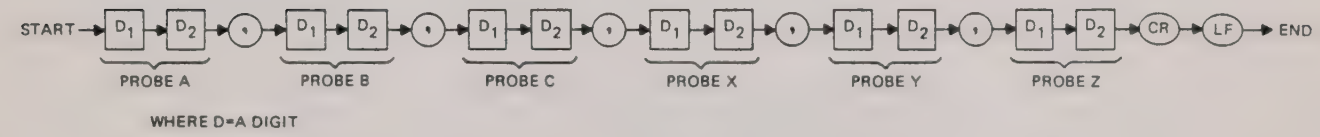

P6 Output Format - this output, consisting of a 7-digit ASCII number, indicates the number of runs since power-up or the last Reset Command (R). Seven digits, having a range from 0000000 to 1,048,575 is always transmitted.

P7 Output Format - this output transmits the Memory signatures for the Main, Auxiliary and Word Generator Memories in the following format: "AA,BB,CC,XX,YY,ZZ,WW CR LF" (with the EOI Command transmitted simultaneously with the second

terminator) where the Memory Signatures are in 2-byte Hex-ASCII. In the above output "AA""BB""CC""XX""YY""ZZ" and "WW" are the Memory Signatures for Channel A Main, Channel B Main, Channel C Main, Channel A Auxiliary, Channel B Auxiliary, Channel C Auxiliary and Word Generator Memories, respectively. Refer to the P7-coded Command Syntax Diagram shown below:

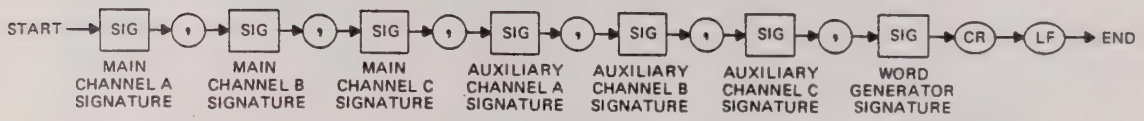

Table 7.6 - 202/205 **INPUT** GPIB Program Commands (Continued)

OPERATION	CODE
Output Error Message	Y0
Output SRQ Number	Y1
Output Busy Status	Y2

NOTES:

Y0 Output for Error Message (in ASCII) comprises the following string: "ERR XX CR LF (with EOI Command)" where XX, the Error Code, is a 2-digit number from 00 to 99 (00 = no error). See the Error Code Table immediately following this tabulation.

Y1 Output for the SRQ Numbers comprises the following string: "SRQ XX CR LF (with EOI Command)" where XX, the SRQ Number, is a 2-digit number from 00 to 99.

Y2 Output for the Busy Status comprises the following string: "STA X CR LF (with EOI Command)" where X, the single-digit Status Code, is:

0 = Not Running; No Trigger Found
1 = Waiting for ARM 1
2 = Waiting for ARM 2
3 = Waiting for ARM 3
4 = Waiting for Trigger
5 = Run in Progress
6 = Not Running; Trigger Found

Refer to the following YO-Y2 Message Output Syntax Diagram:

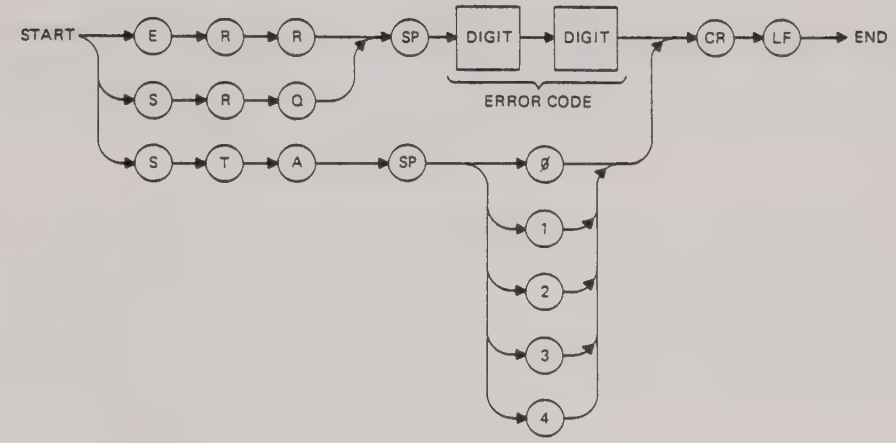

Table 7.7 - 202/205 **ERROR** Code Messages

ERROR CODE NUMBER (nn)	ERROR MESSAGE (ERR = nn)
10	Logic Analyzer Triggered Too Fast
11	Word Generator Triggered Too Fast
12	Input has Syntax Error
13	Numeric Value out-of-range on Input
14	Input Not a Hexadecimal Digit
15	Invalid Entry
16	Invalid Step in Word Generator Operating Mode
17	Checksum Error on Input
18	Can't Select Multiplex Clock with Word Generator Probe in Input A
19	Invalid Run
20	Volatile Memory Read Error (ie: No Data in Volatile Memory)
21	Invalid Store
22	Word Generator and ROM not Installed
23	Input Command Terminated a Run

8.1 INTRODUCTION

8.1.1 This section describes the GPIB Analyzer Assembly (Option 48) which is a universal option for all three Series 200 models.

8.1.2 When used on Series 200 logic analyzers (202/205), the GPIB Analyzer greatly facilitates the remote monitoring of the analyzer in system operation along with the evaluating of collected state information. However, this option is most useful in diagnosing hardware problems that can arise if GPIB devices are malfunctioning and/or if any of them are incompatible with IEEE-Standard-488 (1978).

8.1.3 Designed to assist the user in identifying and correcting such software/hardware failures, the GPIB Analyzer can be used during both instrument design and servicing when operating on the bus. The Analyzer can be set up to collect real-time bus data and clock it from the GPIB into the CPU of the logic analyzer via the internal clock for video display. This permits, then, the user to determine the status of all GPIB signal lines in real time. More often, the DAV handshake line can be employed in the external clock operating mode. In this mode, the DAV line will clock GPIB data only when in the high state.

NOTE

Because only INPUT C is necessary for operating the GPIB Analyzer, Inputs A and B can be used concurrently for conventional state analysis to determine how system software/hardware is affected by GPIB operation.

8.2 GPIB ANALYZER PROBE CONNECTIONS

8.2.1 The GPIB Analyzer Probe Assembly consists of a PCB Assembly housed in a 26-pin probe case and cover along with Probe Input and GPIB Data Cable Assemblies.

8.2.2 Connection to the GPIB is made to any available GPIB connector in the "GPIB system," using Connector J304 (located on the Probe PCB Assembly; 13 X 2 terminals) via the GPIB Data Cable.

8.2.3 Front-panel connection to the logic analyzer is made using Plug P102 (17 X 2 terminals) of the Probe Input Cable via INPUT C.

8.2.4 Refer to the Drawings and Parts Lists for the GPIB Analyzer (pages 10-50 through 10-53 and 11-74 through 11-76, respectively) for additional information.

8.3 GPIB ANALYZER OPERATION

8.3.1 The Series 200 GPIB Analyzer monitors and permits display of all GPIB data and control lines. GPIB Analyzer displays may be in either conventional table (data) or waveform (timing) formats. Transfer between table and waveform display modes is effected using the Format or ⎍ display key, as appropriate. The waveform

display itself comprises two pages (data and control) as shown in Figures 8.1A and B. To alternate between these pages, simply use the toggle function of the ⎍ key by pressing it in successively. The data display page shows the data and handshake lines along with the ATN line. The control display page shows the handshake lines again along with the rest of the GPIB control lines.

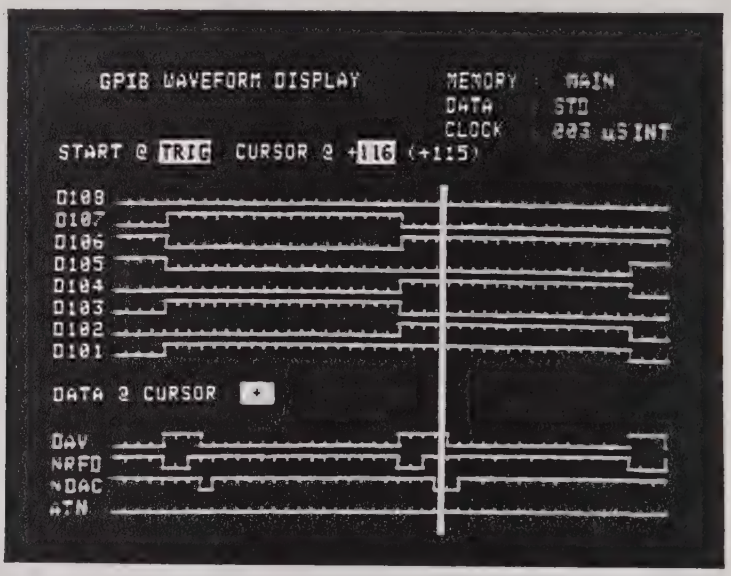

Figure 8.1A - GPIB Waveform Display Showing the Data, Handshake and 'ATN' Lines

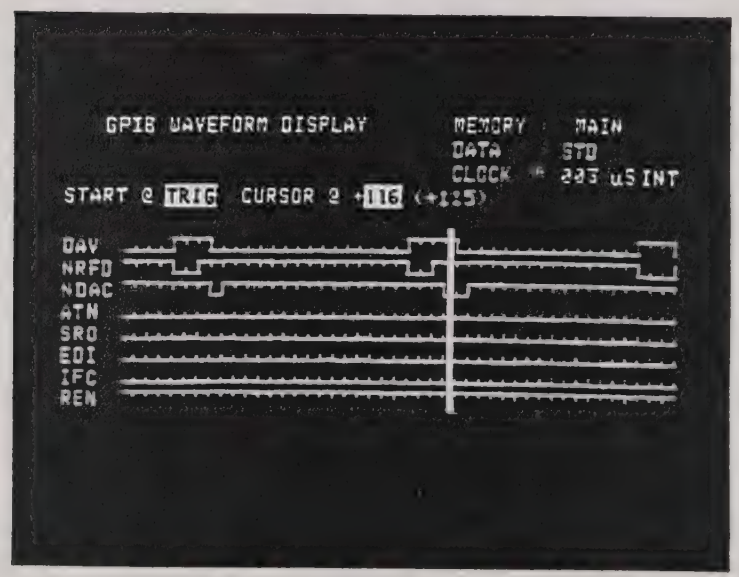

Figure 8.1B - GPIB Waveform Display Showing the Handshake and Interface Lines

8.3.2 Note that both GPIB waveform displays, shown in Figures 8.1A and B, have other display fields. Both have fields in their upper right-hand corner which indicate the memory (**MAIN** or **AUX**) presently displayed as well as the logic polarity (**STD** or **INV**erse) and clock information (**EXT**ernal or **INT**ernal/cycle frequency). Also shown as display fields are the first line of the waveform display; present and previous cursor location. The data value at that particular cursor location is shown on the data display (Figure 8.1A).

8.3.3 The movable cursor itself is a reverse-video vertical line that is relocated across the display by pressing the **FRWD** or **BACK**ward field key, as appropriate. Each movement of the cursor relocates it one location (45 locations for each display page). Each location represents the start of a new clock cycle. Situated vertically on each GPIB signal line on display are short vertical lines, pointing either up or down depending on whether the signal line is low or high, respectively.

8.3.4 Updating information when in the waveform mode is easily accomplished using either the **SCROLL** or **PAGE** data keys. The former moves the display field one location across a page; the latter "pages" consecutively through the collected GPIB data on display.

8.4 GPIB LINE DESIGNATIONS

8.4.1 Table 8.1 below lists Series 200 conventional line designators and their corresponding GPIB counterparts. Use this table when operating the GPIB Analyzer option.

Table 8.1 - Series 200 GPIB Analyzer Line Designations

Conventional Line Designations	GPIB Line Designations
D0	DIO 1
D1	DIO 2
D2	DIO 3
D3	DIO 4
D4	DIO 5
D5	DIO 6
D6	DIO 7
D7	DIO 8
D8	REN
D9	IFC
D10	EOI
D11	SRQ
D12	ATN
D13	NDAC
D14	NRFD
D15	DAV
CLOCK	DAV
NOTE: The trigger and clock qualifiers can be connected internally within the GPIB Analyzer probe.	

8.4.2 GPIB data displayed at the movable cursor line refers only to data collected by the GPIB Analyzer and, therefore, pertains only to GPIB information from signal lines DIO 1 - DIO 8. The value of GPIB data is normally displayed in ASCII format, set up in the TRIGger Menu.

8.4.3 Selecting standard (STD) **INPUT LOGIC** on the Input Menu displays the GPIB lines in positive logic. That is, when the DAV handshake line is asserted, its value equals 1; when the NRFD and NDAC lines are asserted during a handshake, their values will be 0. (Operation on the GPIB itself uses negative logic so that inverse (**INV**) **INPUT LOGIC** must be selected on the Input Menu in order that the GPIB Analyzer display will correspond directly with GPIB activity.)

8.5 GPIB ANALYZER APPLICATION

8.5.1 The following subsections present application information in two major categories: (1) real-time GPIB analysis using internal clocking and (2) data analysis offering "compressed" data display for comprehensive inspections of GPIB traffic. With an external clocking, the rising edge of the DAV line is used.

NOTE

When using external clocking, handshake lines not changing state can be displayed, while using internal clocking permits the viewing of handshake lines which are changing state.

8.5.2 GPIB Analysis - Internal Clock Mode

8.5.2.1 **Input Menu** - the set-up will generally conform to that shown below after Mode Menu selection.

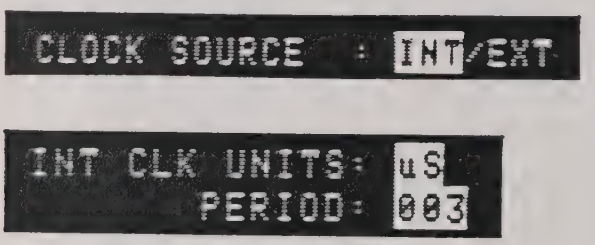

Note that since the **INT**ernal **CLOCK SOURCE** entry has been specified, **INT**ernal **CLK UNITS** and **PERIOD** must also be selected. In the example above, 3 microseconds was selected. Then, for active **PROBE C, INPUT LOGIC** is usually specified by selecting **STD** (standard).

8.5.2.2 **Trigger Menu** - the set-up should conform generally to that shown below (the labeling not being part of the menu format).

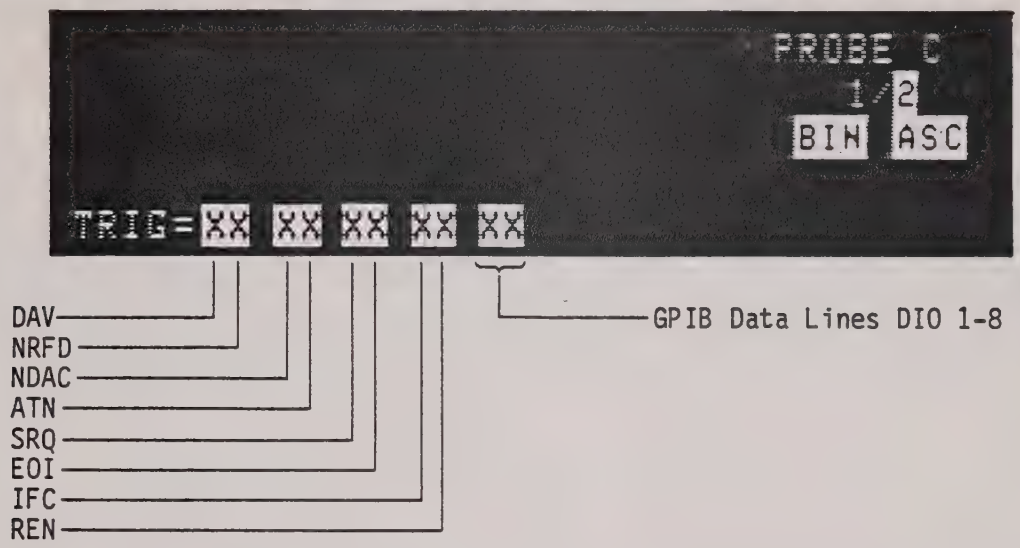

GPIB Control Lines

8.5.2.3 After Trigger Menu set-up and any necessary specification in the Delay Menu, the usual procedure would be to proceed with a state analysis run. After data collection is completed, the user would inspect (probably first) captured state data in table format. Then, by pressing the ⎍ key, the same information could be viewed in waveform display (data and control pages, as shown in Figure 8.1A and B).

8.5.3 **GPIB Analysis - External Clock Mode**

8.5.3.1 Input Menu - the set-up should generally follow that which follows after Mode Menu selection. For active **PROBE C, INPUT LOGIC** is usually specified as **STD** (standard) and the **CLOCK SLOPE** must be a rising edge (⎍) for the DAV control line.

8.5.3.2 **Trigger Menu** - the set-up is the same as that detailed for the Internal Clock Mode (see 8.5.2.2).

8080/8085 ADAPTORS/DISASSEMBLER OPTION 80

9.1 INTRODUCTION - OPTION 80

9.1.1 This section contains basic descriptive information on the installation and operation of Option 80, the 8080/8085 Adaptors/Disassembler. This option is a universal one for all three Series 200 models. Option 80 provides the two necessary adaptor assemblies and a single PROM for 8080 and 8085 disassembly. It is necessary to either have or purchase separately Racal-Dana Option 08, the 8-bit microprocessor probe to use Option 80. Option 08 is comprised of (1) an 8-bit microprocessor probe assembly, (2) a 40-pin socket module, (3) the necessary probe cables, and (4) a 40-pin dip clip.

9.2 INSTALLATION - OPTION 80

9.2.1 PROM Installation

9.2.1.1 For Series 200 logic analyzers with CPU board Assembly P/N 401707, a PROM having P/N 230680 is provided with the 8080/8085 Adaptors/Disassembler (P/N 404297). (The CPU Assembly number is silkscreened on the component side of the PCB.) As shown in Figure 9.1, PROM 230680 may be installed into sockets U28, U29, U36, U37, U38, U39, U40 or U41 as available.

9.2.1.2 For Series 200 logic analyzers with CPU board Assembly P/N 401661, a PROM having P/N 230603 is provided with the 8080/8085 Adaptors/Disassembler (P/N 404242). (Again, verify the CPU Assembly number on the component side of the PCB.) As shown in Figure 9.2, PROM 230603 may be installed into sockets U38, U39, U40 or U41 as available.

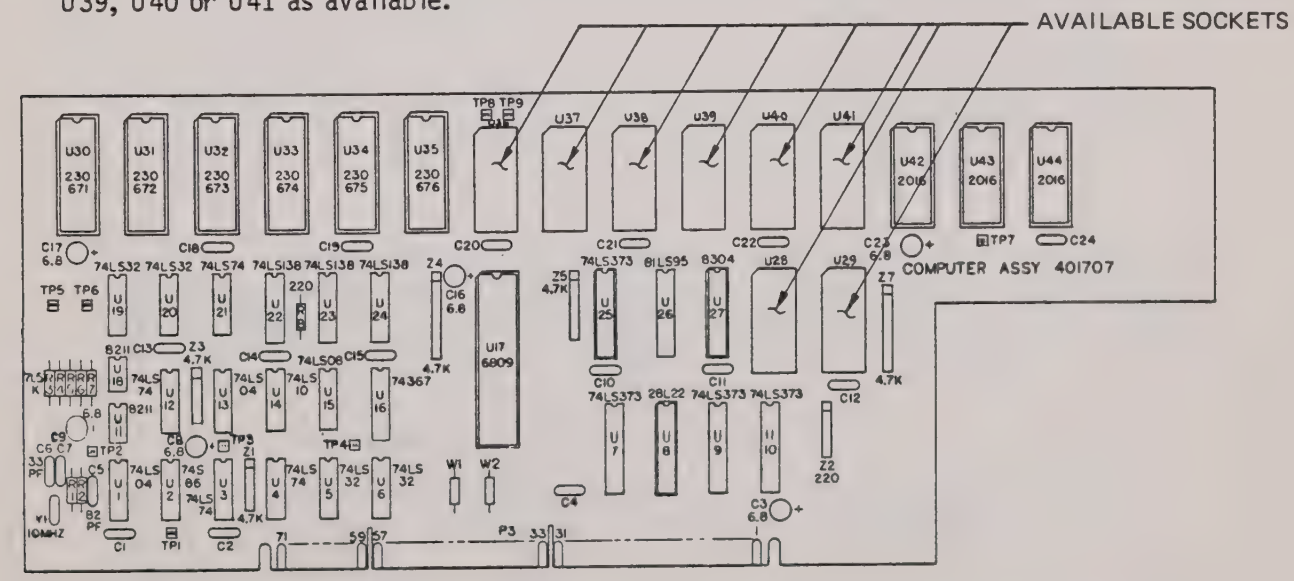

Figure 9.1 - 8080/8085 PROM Installation Sockets Available on CPU Assembly Board 401707 (PROM P/N 230680)

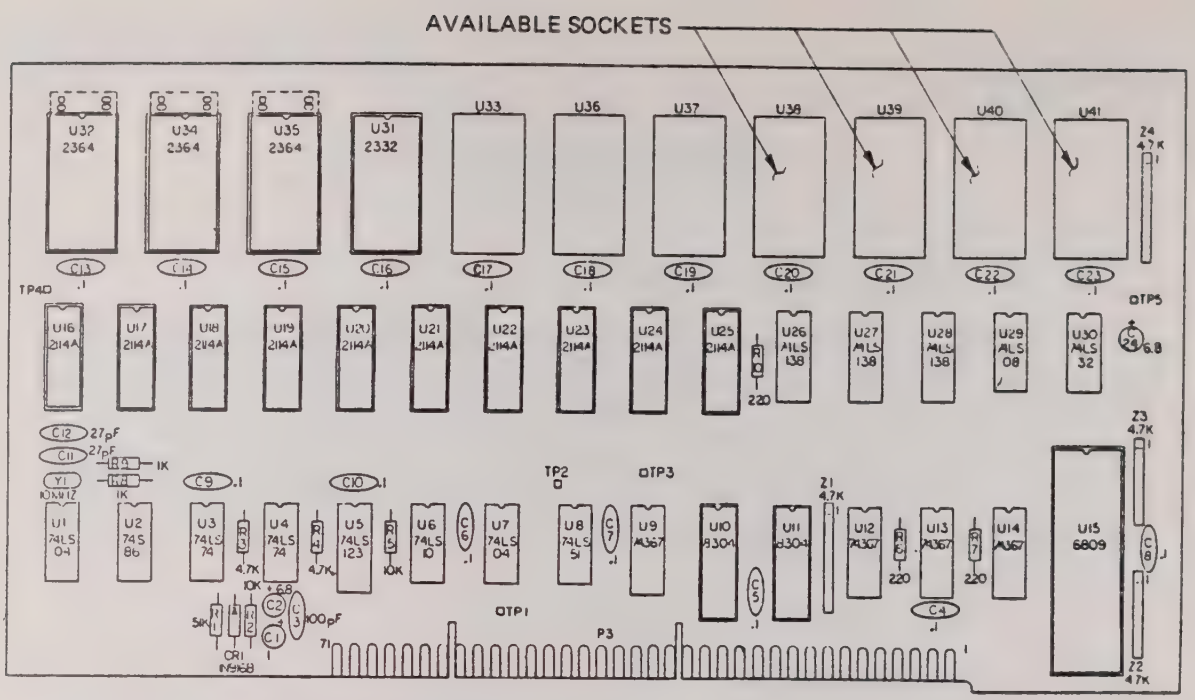

Figure 9.2 - 8080/8085 PROM Installation Sockets Available on CPU Assembly Board 401661 (PROM P/N 230603)

NOTE

Both PROMs 230680 and 230603 can be left permanently installed on their respective CPU assembly boards. Also, should PROMs for different microprocessor families (including the 8080/8085) be installed together on CPU assembly board 401707, the correct disassembler will be automatically selected to match its adaptor.

9.2.2 Microprocessor Probe Installation (Option 08)

9.2.2.1 Figure 9.3 shows the correct arrangement for plugging Option 08, the 8-bit microprocessor probe, into front-panel Inputs A and C of the analyzer.

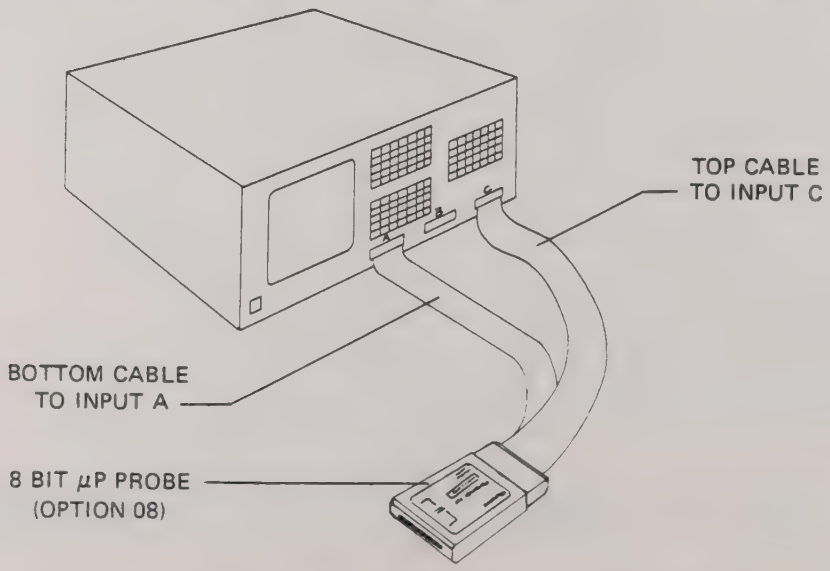

Figure 9.3 - Front Panel Installation of the 8-Bit Microprocessor Probe

9.2.3 Adaptor Installation

9.2.3.1 Option 80 incorporates two Adaptor Assemblies and a PROM. The 8080 Adaptor Assembly is P/N 404230; the 8085 Adaptor Assembly is P/N 404241.

9.2.3.2 Figure 9.4 illustrates how the 8080 or 8085 microprocessor adaptor should be connected to both the 8-bit microprocessor probe and microprocessor cable (note especially the location of the striped conductor of the microprocessor cable with respect to the 8080 or 8085 adaptor).

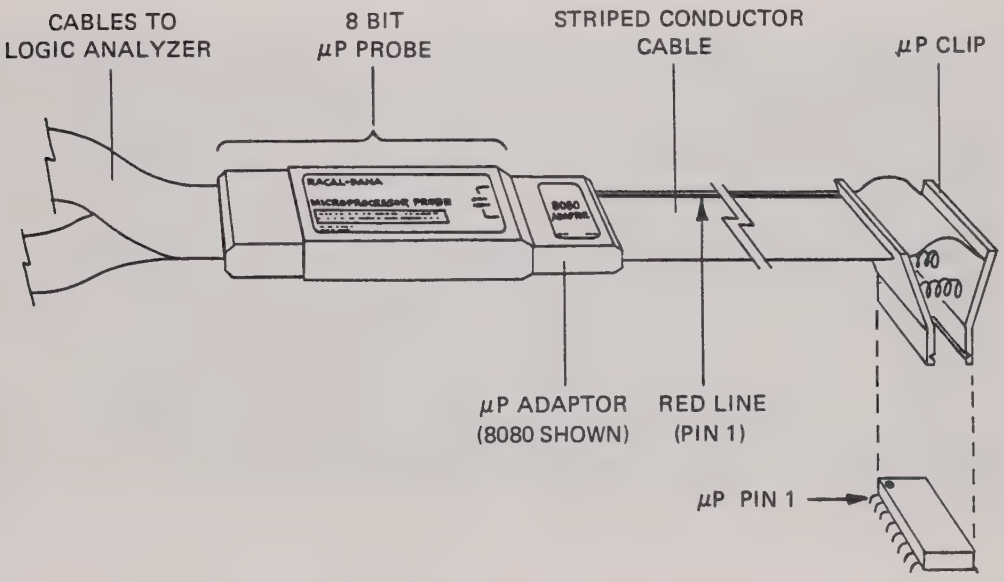

Figure 9.4 - 8080/8085 Adaptor Connections

9.2.3.3 If the 8080/8085 PROM is not installed on its CPU board Assembly, the user will be advised (either at power-up with the microprocessor probe and adaptor installed or when the microprocessor probe is plugged in) by the flashing display "OPTION NOT INSTALLED." Refer to subsection 9.2.1 as necessary for details of PROM installation.

9.3 OPERATION - OPTION 80

9.3.1 Hardware/Software Operation

9.3.1.1 Hardware

9.3.1.1.1 **Input and Triggering Connections** - the 8-bit microprocessor probe plugs into front-panel Inputs A and C. The microprocessor adaptor connected to

this probe routes 8080/8085 microprocessor information to the analyzer for capture and subsequent display on the analyzer's CRT screen. The information collected includes Address, Data, R/$\overline{W}$ and the "instruction fetch" signal. Figure 9.5 illustrates a typical trigger menu display showing the equivalent signal lines for Inputs A and C for the 8080 and the 8085 microprocessors when using Option 80 adaptors. Note that the 32 channels illustrated (one data bit per channel) for Inputs A and C provide essentially the same disassembler information (unless otherwise noted) for both the 8080 and the 8085 microprocessors. Specific triggering conditions including inputs for address, data and control can now be set up.

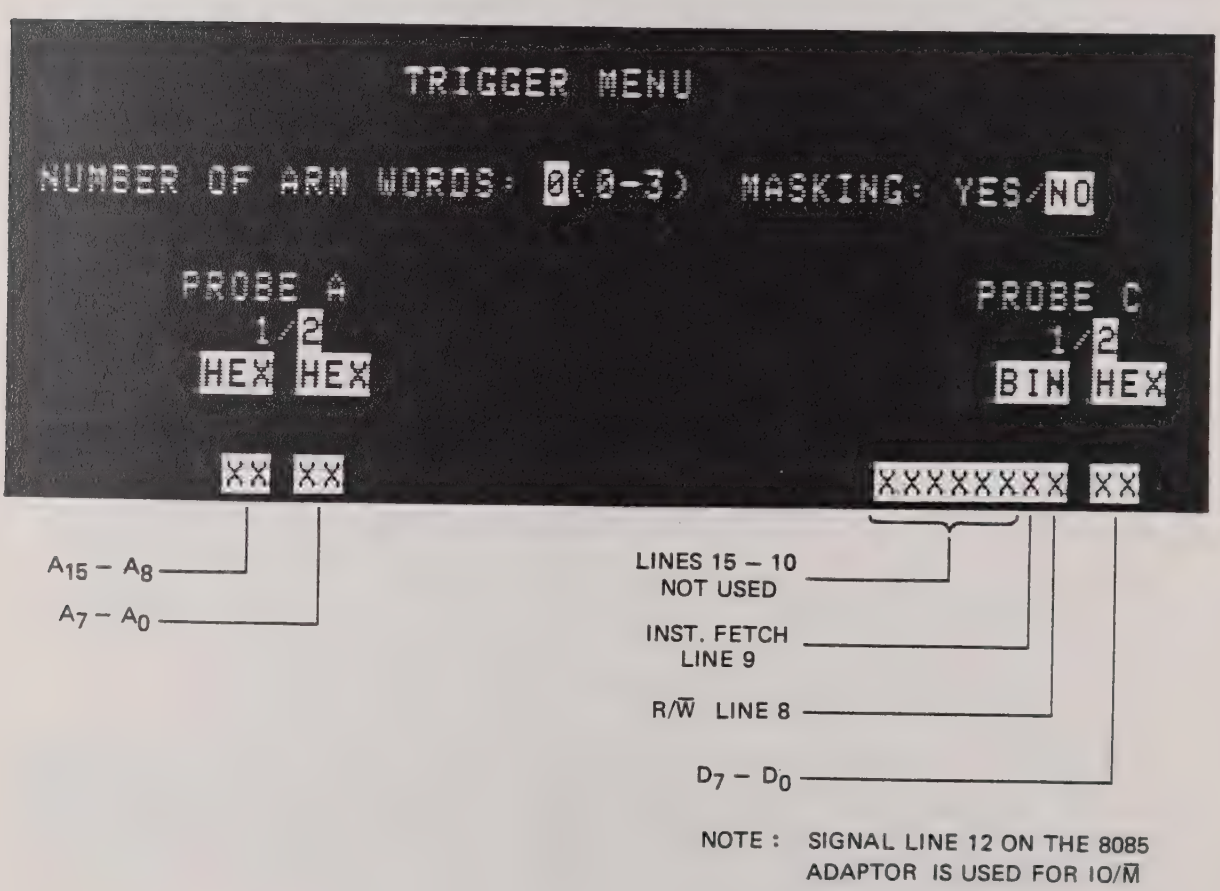

Figure 9.5 - Input A and C Signal Line Designations for 8080/8085 Disassemblers on Trigger Display

9.3.1.2 **Input Menu Setup**

9.3.1.2.1 The Input Menu is automatically set up for the 8080/8085 either when the analyzer is powered-up (with the microprocessor probe and adaptor connected), or when the microprocessor probe (with adaptor connected) is plugged in with the analyzer on. Table 9.1 lists the correct Input Menu settings for the 8080 or 8085.

Table 9.1 - Input Menu Settings for 8080/8085 Disassemblers

	8080		8085	
CLOCK SELECT	MULTIPLEX		MULTIPLEX	
CLOCK SOURCE	EXTernal		EXTernal	
	PROBE A	PROBE C	PROBE A	PROBE C
CLOCK QUALifier	1	1	X	X
TRIGger QUALifier	X	X	X	X
INPUT LOGIC	STD	STD	STD	STD
CLOCK SLOPE	⌊	⌊	⌈	⌊

9.3.2 **Software**

9.3.2.1 The disassembler software retrieves the captured data and displays it on the video screen. When the "instruction fetch" signal indicates that the data is an opcode, a mnemonic is also displayed.

9.3.2.2 **Mnemonic Key** - the 8080/8085 Disassembler only operates when the logic analyzer is in the mnemonics display mode. However, before pressing the **MNE** key, a run must be completed with the microprocessor probe and adaptor installed. Should the data collection run not be completed first, the operator advisory "PROBE NOT INSTALLED" will be displayed if the **MNE** key is pressed. After completing the required run, press the **MNE** key to display 8-bit microprocessor data in the mnemonic format specific to the 8080/8085 Disassembler. Pressing any other **DISPLAY** key besides the **MNE** key causes the analyzer to exit the mnemonics mode.

9.3.3 **Mnemonics Mode Display**

9.3.3.1 Refer to Figure 9.6 which shows a typical mnemonics mode display. Each display segment is identified in the figure and described in the following subsections.

9.3.3.1.1 **Line Number Field** - the display heading for this field signifies which memory, **MAIN** or **AUX**iliary, is currently on screen. The memory line numbers are displayed beneath the heading.

9.3.3.1.2 **Address Bus Field** - this field displays the address bus data in hexadecimal code.

9.3.3.1.3 **Data Bus Field** - this field is comprised of two field segments. The left one displays the letter designation of the read/write status of the data bus. An "R" indicates a read status, whereas a "W" indicates a write status. The right field segment displays the data bus information in hexadecimal code.

9.3.3.1.4 **Disassembly Field** - this field also is composed of two field segments. The left one is the mnemonics field and is designated by the header "INST" (Instruction). The right segment is the "OPERAND" field and is so labelled by the header.

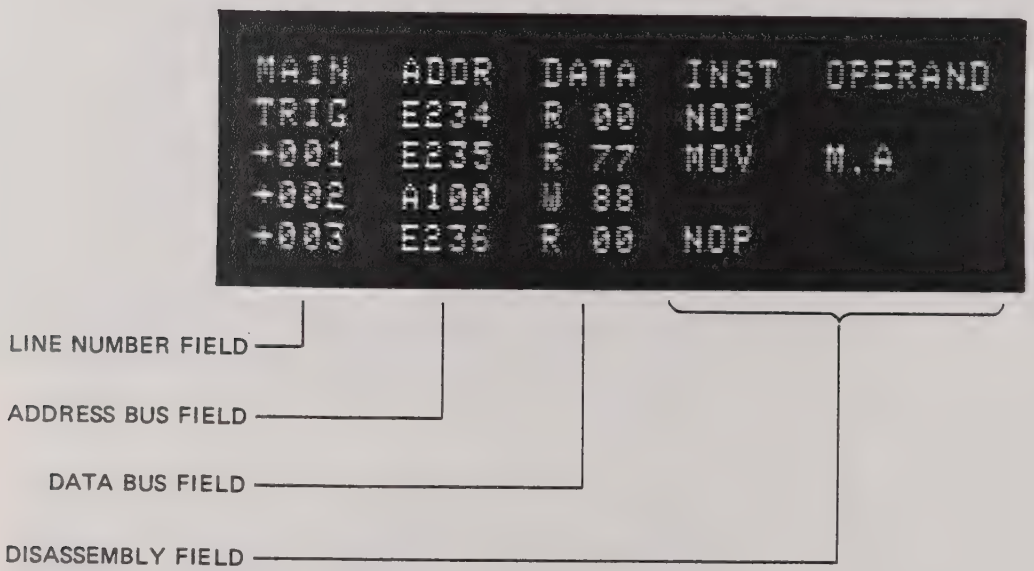

Figure 9.6 - 8080/8085 Mnemonics Mode Display

9.3.3.2 **Invalid Operating Codes** - the mnemonics field ("INST") for the 8080 and 8085 Disassemblers provides a specific mnemonic for invalid opcodes during microprocessor disassembly. If an invalid opcode is sensed, the user will observe that the "INST" field is filled with four asterisks (****). An example producing such an invalid opcode would be a poor connection to the microprocessor preventing some data lines from being correctly captured.

9.3.3.3 **Multibyte Instructions** - if only the first portion of a multibyte instruction is captured, those segments to be displayed in the "OPERAND" field that were not collected are displayed as "XX." For example, assume that the 250th memory location contained the first byte of the multibyte instruction "LDA 2000H". Since the last two bytes of the instruction were not captured, "LDA XXXXH" would be displayed.

NOTE

Throughout this section when reference is made to the 6800 microprocessor and its disassembly, it also applies to the 6802 microprocessor.

9.4 INTRODUCTION - OPTION 68

9.4.1 This section contains basic descriptive information on the installation and operation of Option 68, the 6800/6809 Adaptors/Disassembler. This option is a universal one for all three Series 200 models. Option 68 provides the two necessary adaptor assemblies and required PROMs for 6800 and 6809 disassembly. It is necessary to either have or purchase separately Racal-Dana Option 08, the 8-bit microprocessor probe, to use Option 68. Option 08 is comprised of (1) an 8-bit microprocessor probe assembly, (2) a 40-pin socket module, (3) the necessary probe cables, and (4) a 40-pin dip clip.

9.5 INSTALLATION - OPTION 68

9.5.1 PROM Installation

9.5.1.1 For Series 200 logic analyzers with CPU board Assembly P/N 401707, PROMs having P/N's 230685 (6800) or 230686 (6809) are provided with the 6800/6809 Adaptors/Disassembler (P/N 404299). (The CPU Assembly number is silkscreened on the component side of the PCB.) As shown in Figure 9.7, either PROM can be installed into sockets U29, U37, U39 or U41 as available. Also, both PROMs 230685 and 230686 may reside on the same CPU PCB assembly simultaneously.

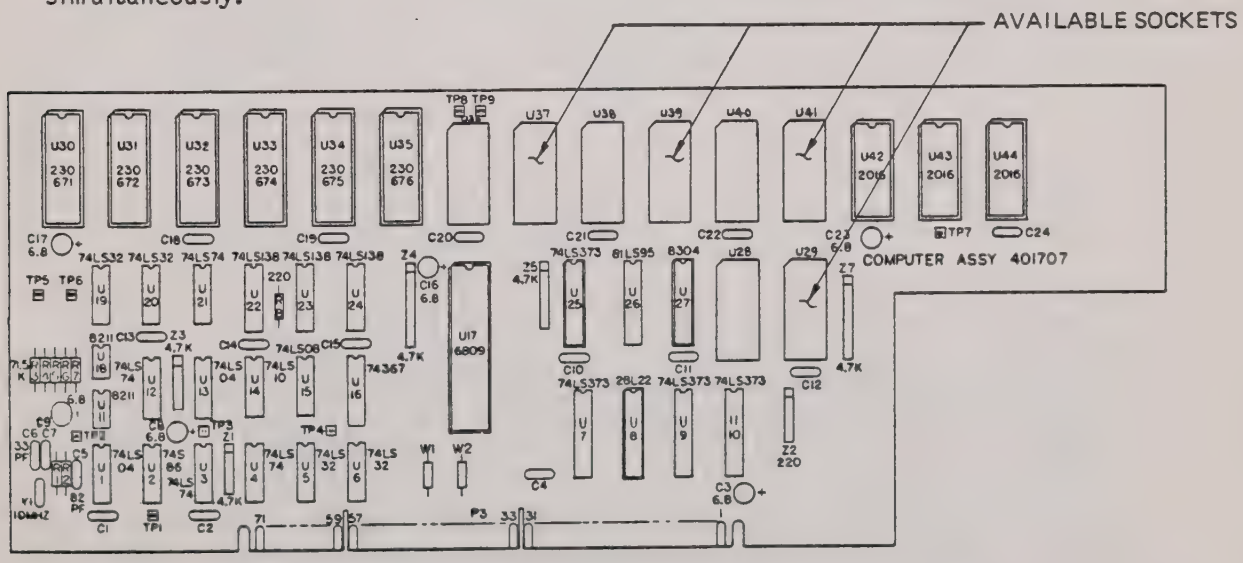

Figure 9.7 - 6800/6809 PROM Installation Sockets Available on CPU Assembly Board 401707 (PROM P/N's 230685-6800; 230686-6809)

9.5.1.2 For Series 200 logic analyzers with CPU board Assembly P/N 401661, PROMs having P/N's 230681 and 230682 (6800) or P/N's 230683 and 230684 (6809) are provided with the 6800/6809 Adaptors/Disassembler (P/N 404240). (Again, verify the CPU Assembly number on the component side of the PCB.) Only one set of disassembler PROMs may reside on this CPU Assembly board at a time. Refer to Table 9.2 for a summary of PROM installation requirements.

Table 9.2 - 6800/6809 PROM Installation Requirements for CPU Assembly Board 401661

6800 uP		
Configuration A	U38 - PROM P/N 230682	U39 - PROM P/N 230681
Configuration B*	U39 - PROM P/N 230682	U40 - PROM P/N 230681
6809 uP		
Configuration A	U38 - PROM P/N 230684	U39 - PROM P/N 230683
Configuration B*	U39 - PROM P/N 230684	U40 - PROM P/N 230683

* If your Series 200 logic analyzer has a GPIB installed (Option 55 on the 202; standard on the 205), Socket U40 is already occupied, requiring the use of Configuration A.

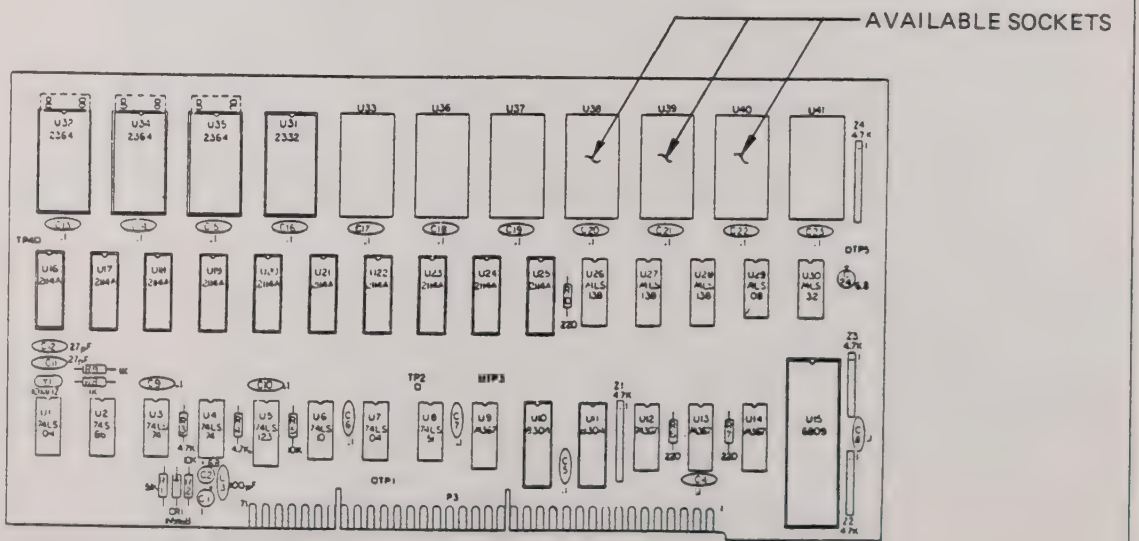

NOTE

All disassembly option PROMs can be left permanently installed on their respective CPU assembly boards. Also, should PROMs for different microprocessor families (for example, 6800/6809/8080/8085/Z80 microprocessors) be installed together on CPU assembly board 401707, the correct disassembler will automatically be selected to match its adaptor.

9.5.2 Microprocessor Probe Installation (Option 08)

9.5.2.1 Figure 9.8 shows the correct arrangement for plugging Option 08, the 8-bit microprocessor probe, into front-panel Inputs A and C of the analyzer.

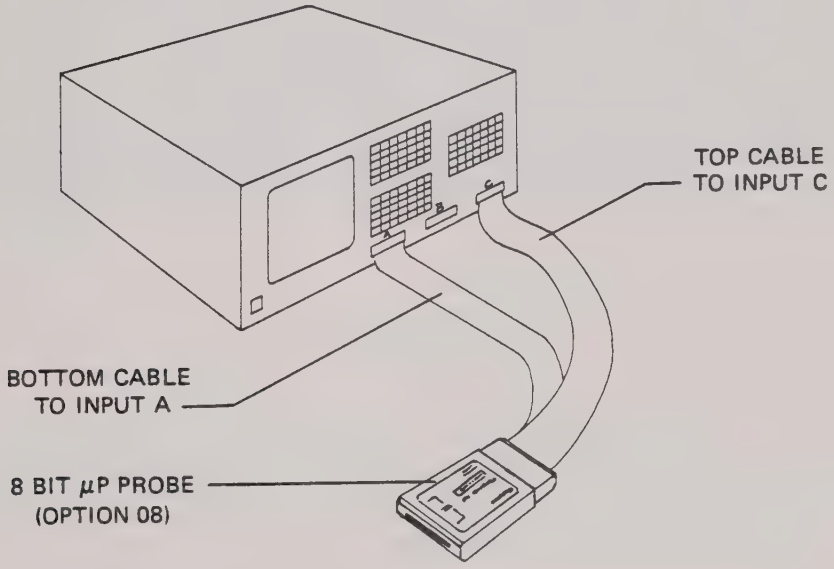

Figure 9.8 - Front Panel Installation of the 8-Bit Microprocessor Probe

9.5.3 Adaptor Installation

9.5.3.1 Option 68 incorporates two Adaptor Assemblies and the appropriate set of PROMs. The 6800 Adaptor Assembly is P/N 404238; the 6809 Adaptor Assembly is P/N 404239.

9.5.3.2 Figure 9.9 illustrates how the 6800 or 6809 microprocessor adaptor should be connected to both the 8-bit microprocessor probe and micro- processor cable (note especially the location of the striped conductor of the microprocessor cable with respect to the 6800 or 6809 adaptor).

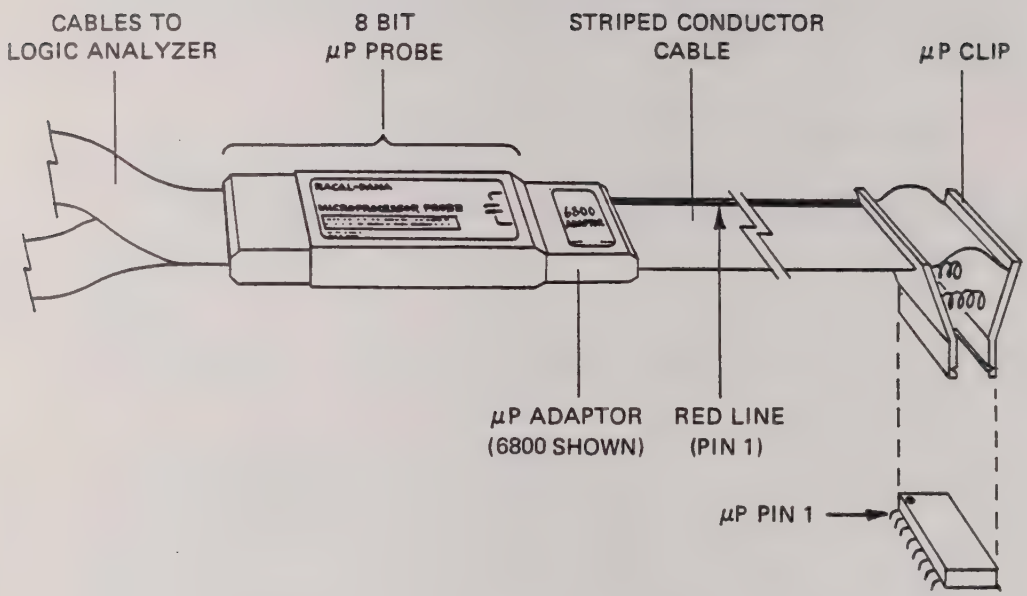

Figure 9.9 - 6800/6809 Adaptor Connections

9.5.3.3 If the 6800/6809 PROMs are not installed on the CPU board Assembly, the user will be advised when the microprocessor probe is plugged in by the flashing display "OPTION NOT INSTALLED." Refer to subsection 9.5.1 as necessary for details of PROM installation.

9.6 OPERATION - OPTION 68

9.6.1 Hardware/Software Operation

9.6.1.1 Hardware

9.6.1.1.1 **Input and Triggering Connections** - the 8-bit microprocessor probe plugs into front-panel Inputs A and C. The microprocessor adaptor connected to this probe routes 6800/6809 microprocessor information to the analyzer for capture and subsequent display on the analyzer's CRT screen. The information collected includes Address, Data, R/$\overline{W}$, $\overline{NMI}$ (Non-Maskable Interrupt), $\overline{IRQ}$ (Interrupt Request), $\overline{HALT}$ (6800 only), $\overline{FIRQ}$ (Fast Interrupt Request; 6809 only) and BA (Bus Available) data. Figure 9.10 illustrates a typical trigger menu display showing the equivalent signal lines for Inputs A and C for the 6800 and the 6809 microprocessors when using Option 68 adaptors. Note that the 32 channels illustrated (one data bit per channel) for Inputs A and C provide essentially the same disassembler information (unless otherwise noted) for both the 6800 and 6809 microprocessors. Specific triggering conditions including inputs for address, data and control can now be set up.

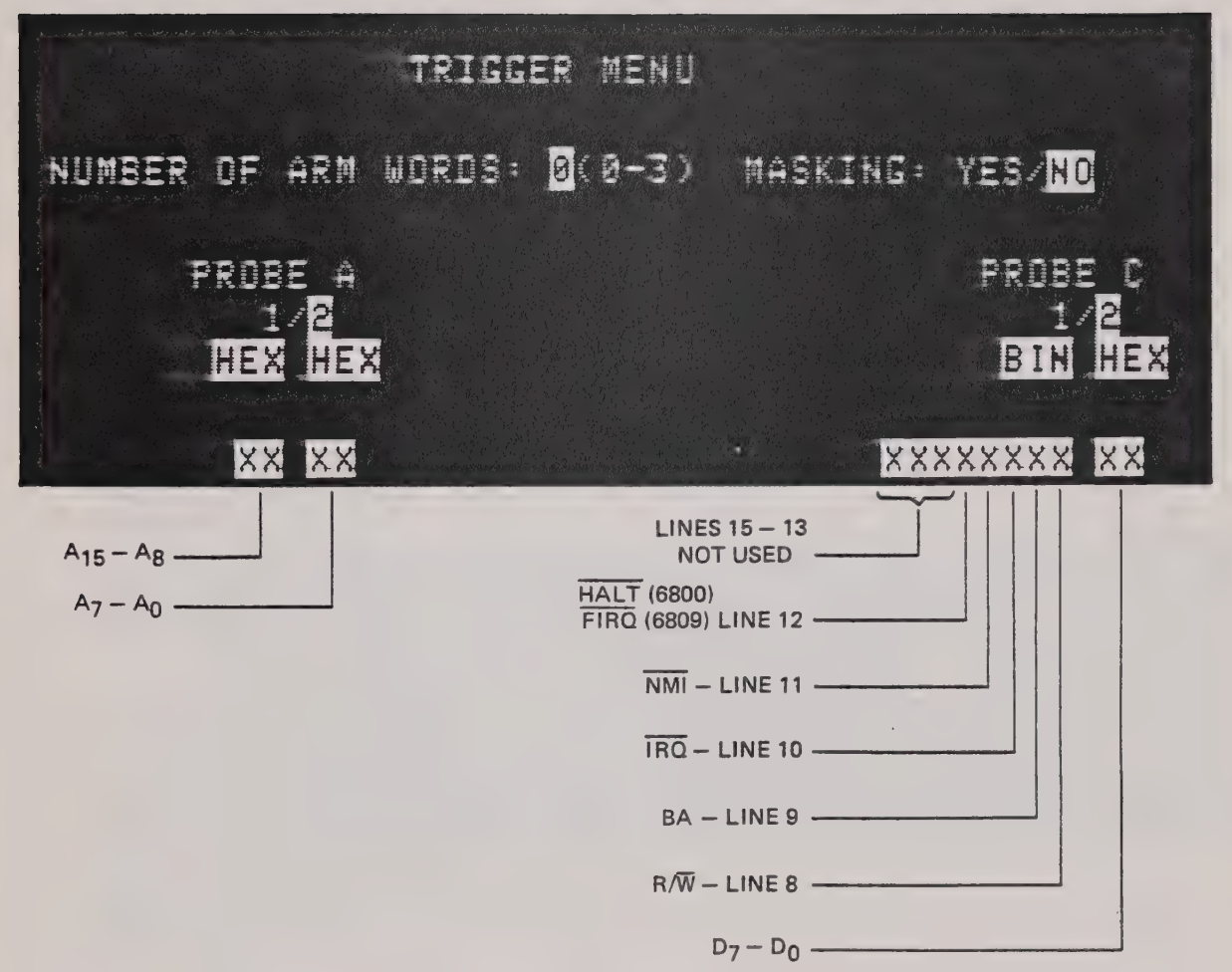

Figure 9.10 - Input A and C Signal Line Designations for 6800/6809 Disassemblers on Trigger Display

9.6.1.2 **Input Menu Setup**

9.6.1.2.1 The Input Menu is automatically set up for the 6800/6809 either when the analyzer is powered-up (with the microprocessor probe and adaptor connected) or when the microprocessor probe (with adaptor connected) is plugged in with the analyzer powered-on. Table 9.3 lists the correct Input Menu settings for the 6800 or 6809.

Table 9.3 - Input Menu Settings for 6800/6809 Disassemblers

	6800		6809	
CLOCK SELECT	COMMON		MULTIPLEX	
CLOCK SOURCE	EXTernal		EXTernal	
	PROBE A	PROBE C	PROBE A	PROBE C
CLOCK QUALifier	1	1	0	0
TRIGger QUALifier	X	X	X	X
INPUT LOGIC	STD	STD	STD	STD
CLOCK SLOPE	⎍	⎍	⎏	⎍

9.6.2 **Software**

9.6.2.1 The disassembler software retrieves the captured data and displays it on the video screen. Since Option 68 hardware provides no indication to the user when an "instruction fetch" is occurring, the software performs this function. Generally, the software calculation for an instruction fetch requires less than one second for either the 6800 or the 6809 microprocessors. However, in some worst cases, this calculation may take up to four seconds. Finally, when the instruction fetch signal indicates that the data is an opcode, a mnemonic is displayed. Refer to subsection 9.6.3 for a description of the mnemonics display mode.

9.6.2.2 **Mnemonic Key** - the 6800/6809 Disassembler only operates when the logic analyzer is in the mnemonics display mode. However, before pressing the **MNE** key, a run must be completed with the microprocessor probe and adaptor installed. Should the data collection run not be completed first, the operator advisory "PROBE NOT INSTALLED" will be displayed if the **MNE** is pressed. After completing the required run, press the **MNE** key to display 8-bit microprocessor data in the mnemonic format specific to the 6800/6809 Adaptors/Disassembler. Pressing any other **DISPLAY** key besides the **MNE** key causes the analyzer to exit the mnemonics mode.

9.6.3 **Mnemonics Mode Display**

9.6.3.1 Refer to Figure 9.11 which shows a typical mnemonics mode display. Each display segment is identified in the figure and described in the following subsections.

9.6.3.1.1 **Line Number Field** - the display heading for this field signifies which memory, **MAIN** or **AUX**iliary, is currently on screen. The memory line numbers are displayed beneath the heading.

9.6.3.1.2 **Address Bus Field** - this field displays the address bus data in hexadecimal code.

9.6.3.1.3 **Data Bus Field** - this field is composed of two field segments. The left one displays the letter designation of the read/write status of the data bus. An "R" indicates a read status; a "W" signifies a write status. The right field segment displays the data bus information in hexadecimal code.

9.6.3.1.4 **Disassembly Field** - this field also is composed of two field segments. The left one is the mnemonics field and is designated by the header "INST" (Instruction). The right segment is the "OPERAND" field and is so labelled by its header. Should an error occur in the disassembly process, the entire disassembly field header will be displayed in reverse video (see subsection 9.6.3.2).

9.6.3.1.5 **Interrupt Status Field** - this 3-segment field displays the current interrupt input status for that machine cycle. If the logic level at an interrupt input is true, a letter or letters signifying the type of interrupt will be displayed. The possible letter designations are: "N" = $\overline{\text{NMI}}$ (Non-Maskable Interrupt), "I" = $\overline{\text{IRQ}}$ (Interrupt Request), and "F" = $\overline{\text{FIRQ}}$ (Fast Interrupt Request).

9.6.3.1.6 **Channel B Field** - this field displays Channel B data in hexadecimal code.

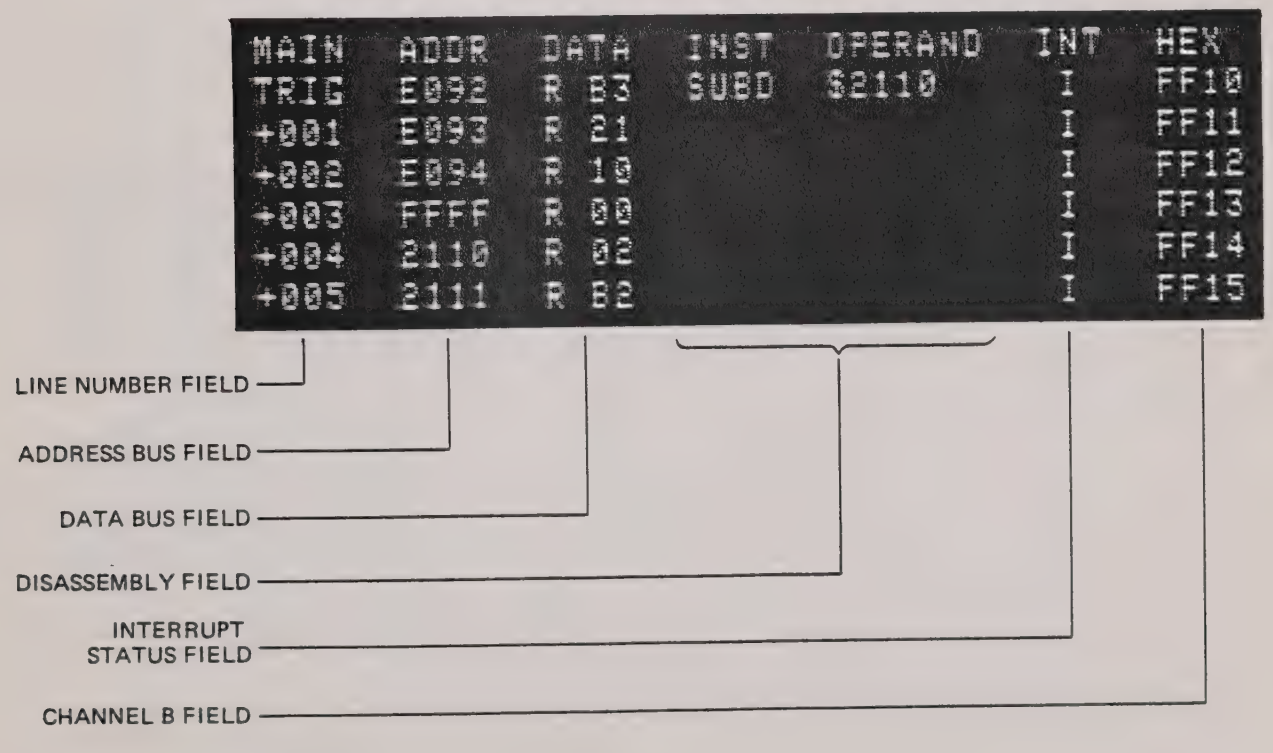

Figure 9.11 - 6800/6809 Mnemonics Mode Display

9.6.3.2 **Reverse Video Display** - the "INST OPERAND" header is displayed in reverse video when certain failure modes (such as a "runaway" microprocessor or faulty data/address lines) occur. In such instances, the Option 68 software is not able to assure the operator that the mnemonics are correct.

9.6.3.3 **Interrupt Vectors** - these are displayed by the following special 3-letter mnemonics: IRQ (Interrupt Request), NMI (Non-Maskable Interrupt) and RES (Reset) in the "INST" and three asterisks (***) in the "OPERAND" display segments, respectively.

9.7 INTRODUCTION - OPTION Z80

9.7.1 This section contains basic descriptive information on the installation and operation of the Option Z80 Probe and Disassembler. This option is a universal one for all three Series 200 models. Option Z80 provides (1) the 8-bit dedicated Z80 probe assembly, (2) the necessary PROMs, (3) a 40-pin socket module, (4) the required probe cables, and (5) a 40-pin dip clip. (The last three items listed are part of Racal-Dana Option 08.)

9.8 INSTALLATION - OPTION Z80

9.8.1 PROM Installation

9.8.1.1 For Series 200 logic analyzers with CPU board Assembly P/N 401707, a PROM having P/N 230691 is provided with the Z80 Probe and Disassembler (P/N 404302). (The CPU Assembly number is silkscreened on the component side of the PCB.) As shown in Figure 9.12, the PROM may be installed into sockets U29, U37, U39 or U41 as available.

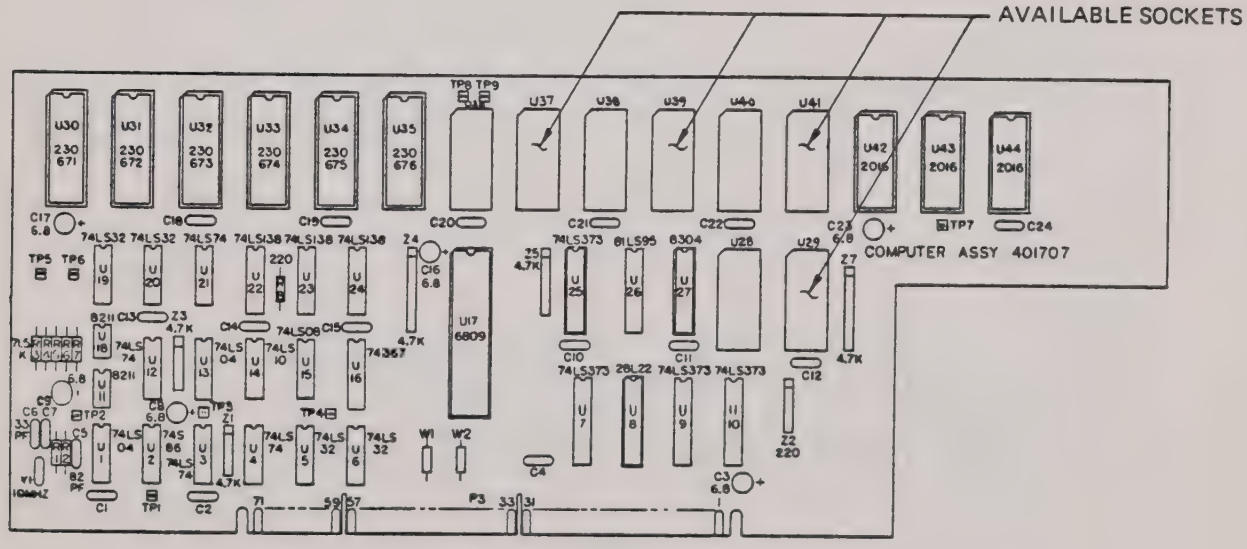

Figure 9.12 - Z80 PROM Installation Sockets Available on CPU Assembly Board 401707 (PROM P/N 230691)

9.8.1.2 For Series 200 logic analyzers with CPU board Assembly P/N 401661, PROMs having P/N's 230687 and 230688 are provided with the Z80 Probe and Disassembler (P/N 404301). (Again, verify the CPU Assembly number on the component side of the PCB.) Refer to Table 9.4 for a summary of PROM installation requirements.

Table 9.4 - Z80 PROM Installation Requirements for CPU Assembly Board 401661

Configuration A	U38 - PROM P/N 230688	U39 - PROM P/N 230687
Configuration B*	U39 - PROM P/N 230688	U40 - PROM P/N 230687

* If your Series 200 logic analyzer has a GPIB installed (Option 55 on the 202; standard on the 205), Socket U40 is already occupied, requiring the use of Configuration A.

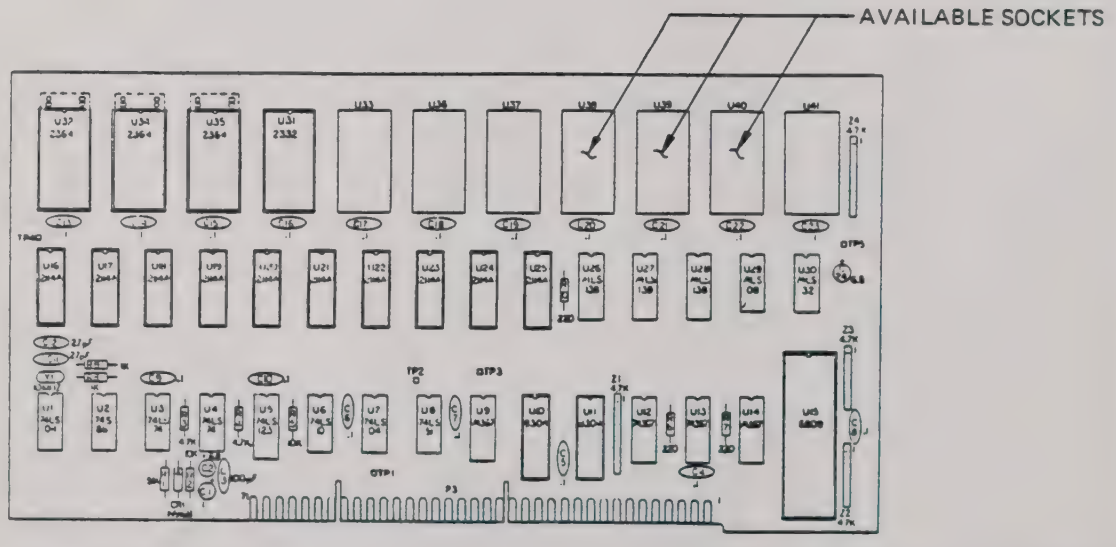

NOTE

All disassembly option PROMs can be left permanently installed on their respective CPU assembly boards. Also, should PROMs for different microprocessor families (for example, 6800/6809/8080/8085/Z80 microprocessors) be installed together on CPU assembly board 401707, the correct disassembler will automatically be selected to match its adaptor.

9.8.1.3 If the Z80 PROMs are not installed on the CPU board Assembly, the user will be advised when the microprocessor probe is plugged in by the flashing display "OPTION NOT INSTALLED."

9.8.2 Z80 Microprocessor Probe Installation

9.8.2.1 Figure 9.13 shows the correct arrangement for plugging the Option Z80 microprocessor probe into front-panel Inputs A and C of the analyzer.

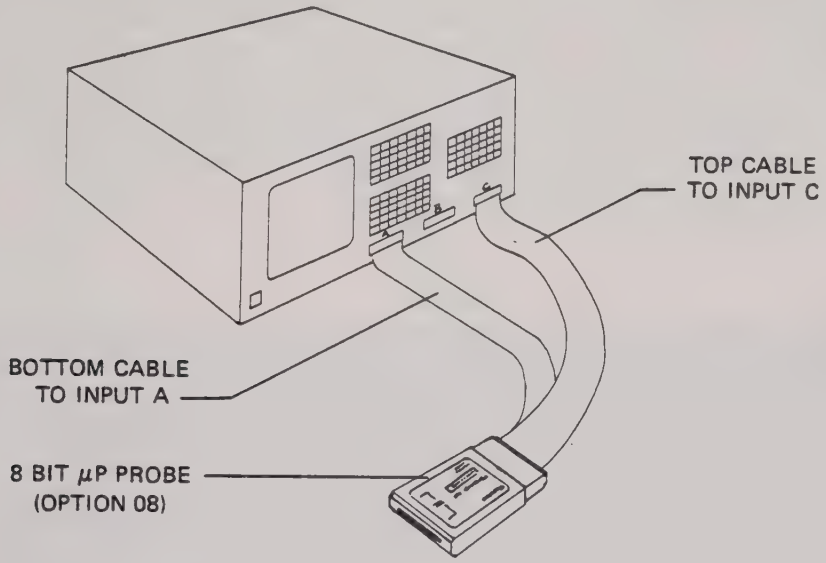

Figure 9.13 - Front Panel Installation of the 8-Bit Microprocessor Probe

9.8.2.2 Figure 9.14 illustrates the interconnected Z80 microprocessor probe and cable (note especially the location of the striped conductor of the microprocessor cable identifying pin 1).

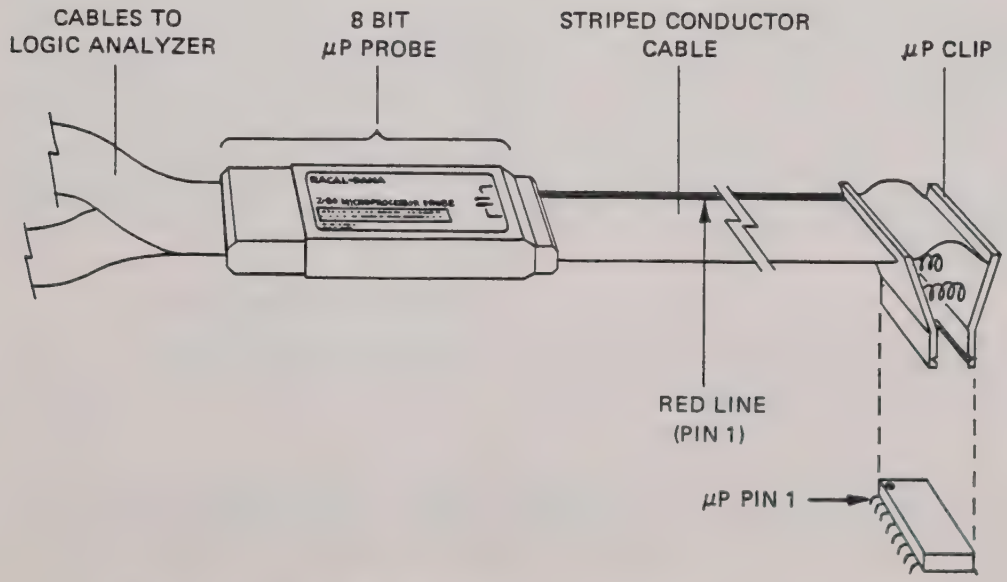

Figure 9.14 - Z80 Microprocessor Probe and Cable Assembly

9.9 OPERATION - OPTION Z80

9.9.1 Hardware/Software Operation

9.9.1.1 Hardware

9.9.1.1.1 **Input and Triggering Connections** - the 8-bit microprocessor probe plugs into front-panel Inputs A and C. The Z80 probe collects and routes Z80 microprocessor information to the analyzer for capture and subsequent display on the analyzer's CRT screen. The information collected includes Address, Data, $\overline{M1}$ (Machine Cycle One) $\overline{R}$, $\overline{W}$, $\overline{IORQ}$ (Input/Output Request), $\overline{NMI}$ (Non-Maskable Interrupt) and $\overline{IRQ}$ (Interrupt Request) data. Figure 9.15 illustrates a typical trigger menu display showing the equivalent signal lines for Inputs A and C for the Z80 microprocessor. Specific triggering conditions including inputs for address, data and control can now be set up.

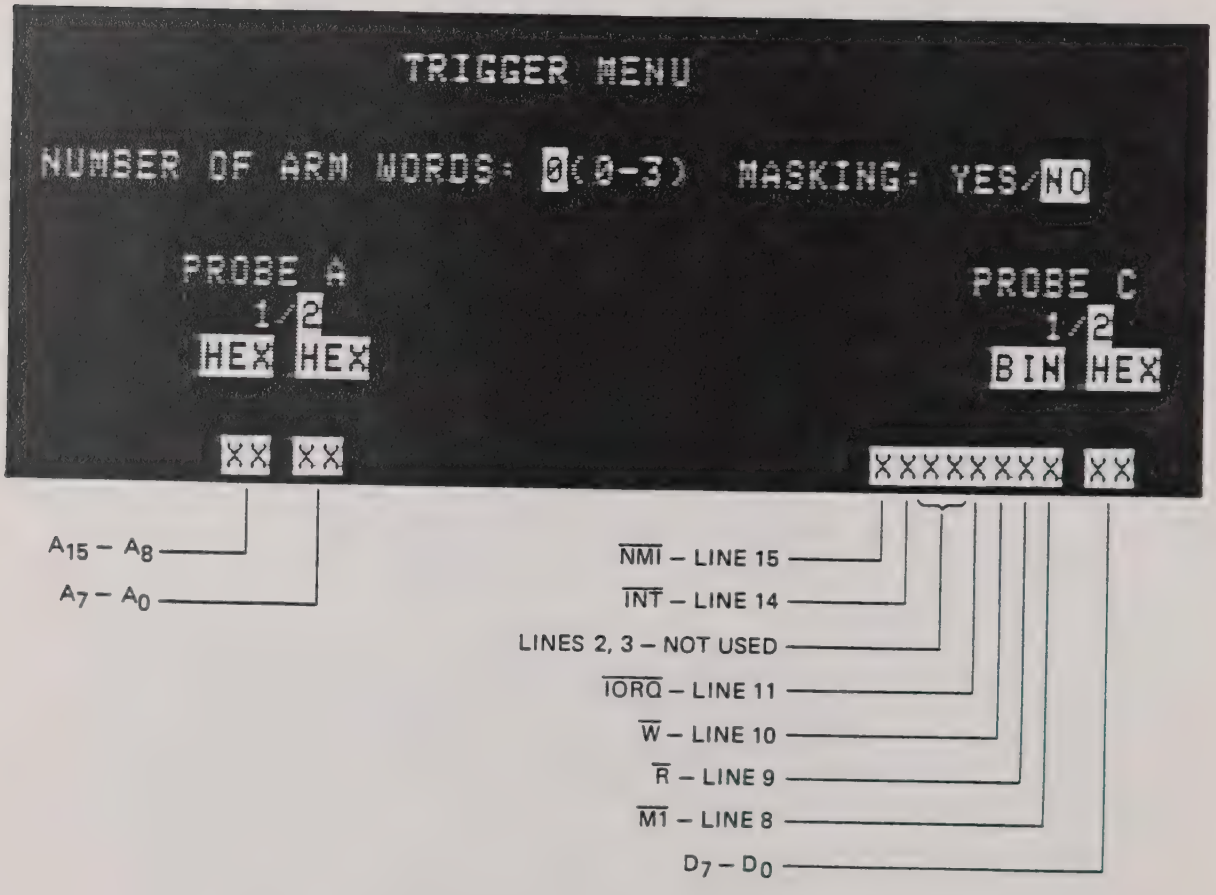

Figure 9.15 - Input A and C Signal Line Designations for the Z80 Disassembler on Trigger Display

9.9.1.2 Input Menu Setup

9.9.1.2.1 The Input Menu is automatically set up for the Z80 either when the analyzer is powered-up (with the microprocessor probe installed), or when the microprocessor probe is plugged in with the analyzer powered-on. Table 9.5 lists the correct Input Menu settings for the Z80.

Table 9.5 - Input Menu Settings for the Z80 Disassembler

	Z80	
CLOCK SELECT	COMMON	
CLOCK SOURCE	EXTernal	
	PROBE A	PROBE C
CLOCK QUALifier	0	0
TRIGger QUALifier	X	X
INPUT LOGIC	INV	INV
CLOCK SLOPE	⌊	⌊

9.9.2 Software

9.9.2.1 The disassembler software retrieves the captured data and displays it on the video screen. When the "instruction fetch" signal indicates that the data is an opcode, a mnemonic is also displayed.

9.9.2.2 **MNEMONIC KEY** - the Z80 Disassembler only operates when the logic analyzer is in the mnemonics display mode. However, before pressing the **MNE** key, a run must be completed with the microprocessor probe installed. Should the data collection run not be completed first, the operator advisory "PROBE NOT INSTALLED" will be displayed if the **MNE** key is pressed. After completing the required run, press the **MNE** key to display 8-bit microprocessor data in the mnemonic format specific to the Z80 Probe and Disassembler. Pressing any other **DISPLAY** key besides the **MNE** key causes the analyzer to exit the mnemonics mode.

9.9.3 Mnemonics Mode Display

9.9.3.1 Refer to Figure 9.16 which shows a typical mnemonics mode display. Each display segment is identified in the figure and described in subsequent subsections.

9.9.3.1.1 **Line Number Field** - the display heading for this field signifies which memory, **MAIN** or **AUX**iliary, is currently on screen. The memory line numbers are displayed beneath the heading.

9.9.3.1.2 **Address Bus Field** - this field displays the address bus data in hexadecimal code.

9.9.3.1.3 **Data Bus Field** - this field is comprised of two field segments. The left one displays the letter designation of the read/write status of the data bus. An "R" indicates a read status; a "W" signifies a write status. The right field segment displays the data bus information in hexadecimal code.

9.9.3.1.4 **Disassembly Field** - this field also is composed of two field segments. The left one is the mnemonics field and is designated by the header "INST" (Instruction). The right segment is the "OPERAND" field and is so labelled by its header.

9.9.3.1.5 **Interrupt Status Field** - this two-segment field displays the current interrupt input status for that machine cycle. If the logic level at an interrupt input is true, one or both of two letters indicating the type of interrupt will be displayed. The possible letter designations are: "I" = $\overline{IRQ}$ (Interrupt Request) and "N" = $\overline{NMI}$ (Non-Maskable Interrupt).

9.9.3.1.6 **Channel B Field** - this field displays Channel B data in hexadecimal code.

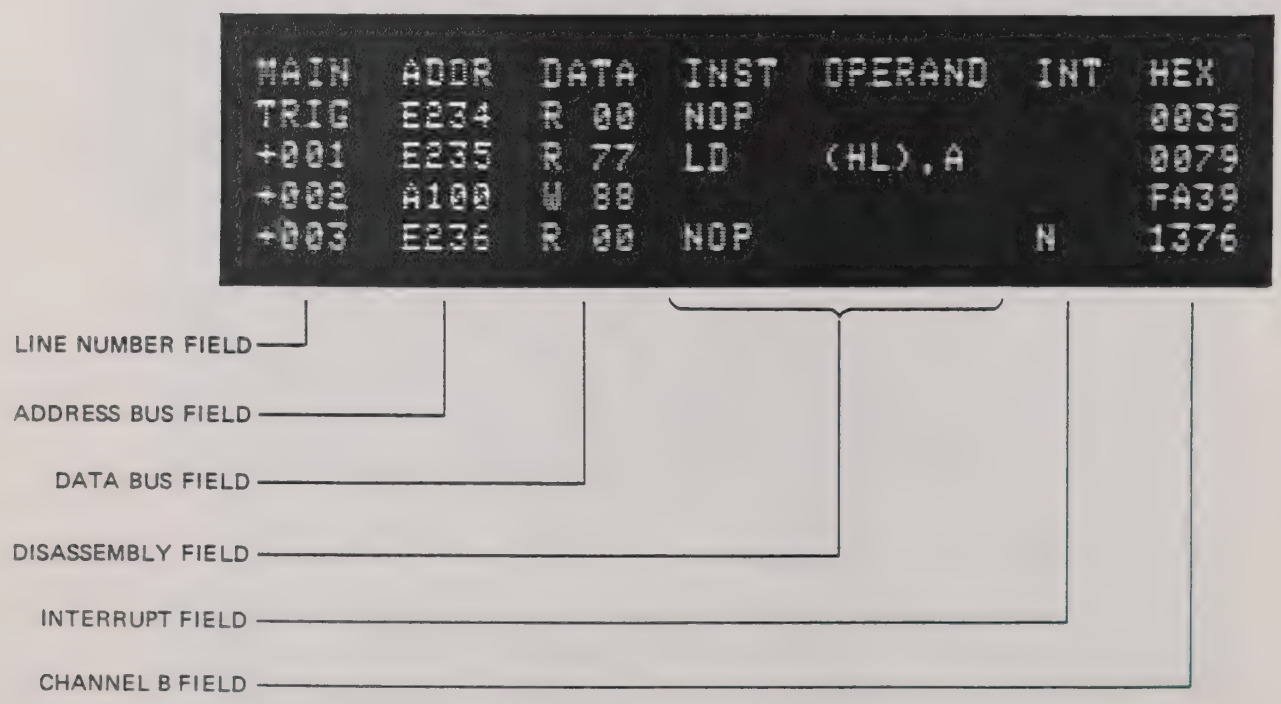

Figure 9.16 - Z80 Mnemonics Mode Display

9.9.3.2 **Invalid Operating Codes** - the mnemonics field ("INST") for the Z80 Disassembler provides a specific mnemonic for invalid opcodes during microprocessor disassembly. If an invalid opcode is sensed, the user will observe that the "INST" field is filled with four asterisks (****). An example producing such an invalid opcode would be a poor connection to the microprocessor preventing some data lines from being correctly captured.

9.9.3.3 **Multibyte Instructions**

9.9.3.3.1 If only the first portion of a multibyte instruction is captured, those segments to be displayed in the "OPERAND" field that were not collected are displayed as "XX." For example, assume that the 250th memory location contained the first byte of the multibyte instruction "LD HL,2000H." Since the last two bytes of the instruction were not captured, "LD HL,XXXXH" would be displayed.

9.9.3.3.2 If the first data collected results from an "instruction fetch," Option Z80 software cannot distinguish between an 8-bit or the second half of a 16-bit opcode. Therefore, disassembler software assumes that the captured data is an 8-bit opcode and displays its mnemonic in reverse video, alerting the user of a possible discrepancy.

9.9.3.3.3 If a portion of a 16-bit instruction is collected in the last location of a valid memory, Option Z80 software cannot determine which instruction it represents and, therefore, fills the "INST" field with four asterisks (****). For example, assume that the 250th memory location contains only the first byte of the multibyte instruction "BIT 4, L." Since the last byte of the multibyte instruction was not captured, "****" would be displayed.

SECTION 10 DRAWINGS

404251	201 ANALYZER ASSY	10-3
404214	202 ANALYZER ASSY	10-4
404256	205 ANALYZER ASSY	10-5
404252	201 CHASSIS ASSY	10-6
404215	202/205 CHASSIS ASSY	10-8
401669	KEYBOARD ENTRY PCB	10-10
431669	SCHEM	10-11
404263	201 REAR PANEL ASSY	10-13
404217	202/205 REAR PANEL ASSY	10-15
404264	201 MOTHERBOARD PCB	10-17
401668	202/205 MOTHERBOARD PCB	10-19
431668	SCHEM	10-21
401707	CPU PCB	10-28
431707	SCHEM	10-29
401661	CPU PCB (used on earlier models)	10-34
431661	SCHEM	10-35
401664	CONTROL PCB	10-38
431664	SCHEM	10-39
404265	201 CHANNEL X/Y INPUT PCB	10-43
401660	202/205 CHANNEL X/Y INPUT PCB	10-44
404212	202/205 CHANNEL Z INPUT PCB	10-45
431660	201/202/205 CHANNEL X/Y/Z-SCHEM	10-46
404298	OPT. 07 - UNIVERSAL 8 BIT uP ADAPTOR	10-48
	OPT. 08 - 8 BIT P ASSY	
404220	PROBE	10-49
401673	PROBE PCB	10-50
431673	PROBE SCHEM	10-51
404249	40 PIN SOCKET MODULE ASSY	10-53
401687	PCB	10-54
431687	SCHEM	10-55
404225	OPT. 48 - GPIB ANALYZER ASSY	
404224	PROBE	10-57
401678	PROBE PCB	10-58
431678	PROBE SCHEM	10-59
404223	OPT. 49 - WORD GENERATOR ASSY	10-60
401663	(STD. ON 205, OPT. ON 202) PCB	10-61
431663	SCHEM	10-62
404222	PROBE	10-63
401675	PROBE PCB	10-64
431675	PROBE SCHEM	10-65

404229	OPT. 50 - NON-VOL ASSY	10-66
401684	(STD. ON 205, OPT. ON 202) PCB	10-67
431684	SCHEM	10-68
404300	OPT. 55 - GPIB INTERFACE ASSY	10-70
404226	OPT. 55 - GPIB INTERFACE ASSY (used on earlier models)	10-71
401666	PCB	10-72
431666	SCHEM	10-73
404299	OPT. 68 - 6800 SERIES DEDICATED KIT	10-74
404240	OPT. 68 - 6800 SERIES DEDICATED KIT (used on earlier models)	10-75
404238	6800/6802 ADAPTOR ASSY	10-76
404685	PCB	10-77
431685	SCHEM	10-78
404239	6809 ADAPTOR ASSY	10-79
401686	PCB	10-80
431686	SCHEM	10-81
404232	OPT. 71 - 100, 120, 220, 240V ASSY	10-82
404297	OPT. 80 - 8080/8085 DEDICATED KIT	10-83
404242	OPT. 80 - 8080/8085 DEDICATED KIT (used on earlier models)	10-84
404230	8080 ADAPTOR ASSY	10-85
401676	PCB	10-86
431676	SCHEM	10-87
404241	8085 ADAPTOR ASSY	10-88
401677	PCB	10-89
431677	SCHEM	10-90
404302	OPT. Z80 - Z80 DISASSEMBLER KIT	10-91
404301	OPT. Z80 - Z80 DISASSEMBLER KIT (used on earlier models)	10-92
404296	Z80 MICROPROCESSOR PROBE ASSY	10-93
404296	PCB	10-94
401708	SCHEM	10-95
404237	OPT. 90 - VARIABLE THRESHOLD PROBE ASSY	10-97
401671	(STD ON 202/205, OPT. ON 201) PCB	10-98
431671	SCHEM	10-99
404227	OPT. 91 - FIXED THRESHOLD PROBE ASSY	10-100
401670	(STD. ON 201, OPT. ON 202/205) PCB	10-101
431670	SCHEM	10-102
404243	EXTENDER BOARD - ABC/WG	10-103
404267	EXTENDER BOARD - CPU/CON	10-104
404268	EXTENDER BOARD - GPIB	10-105

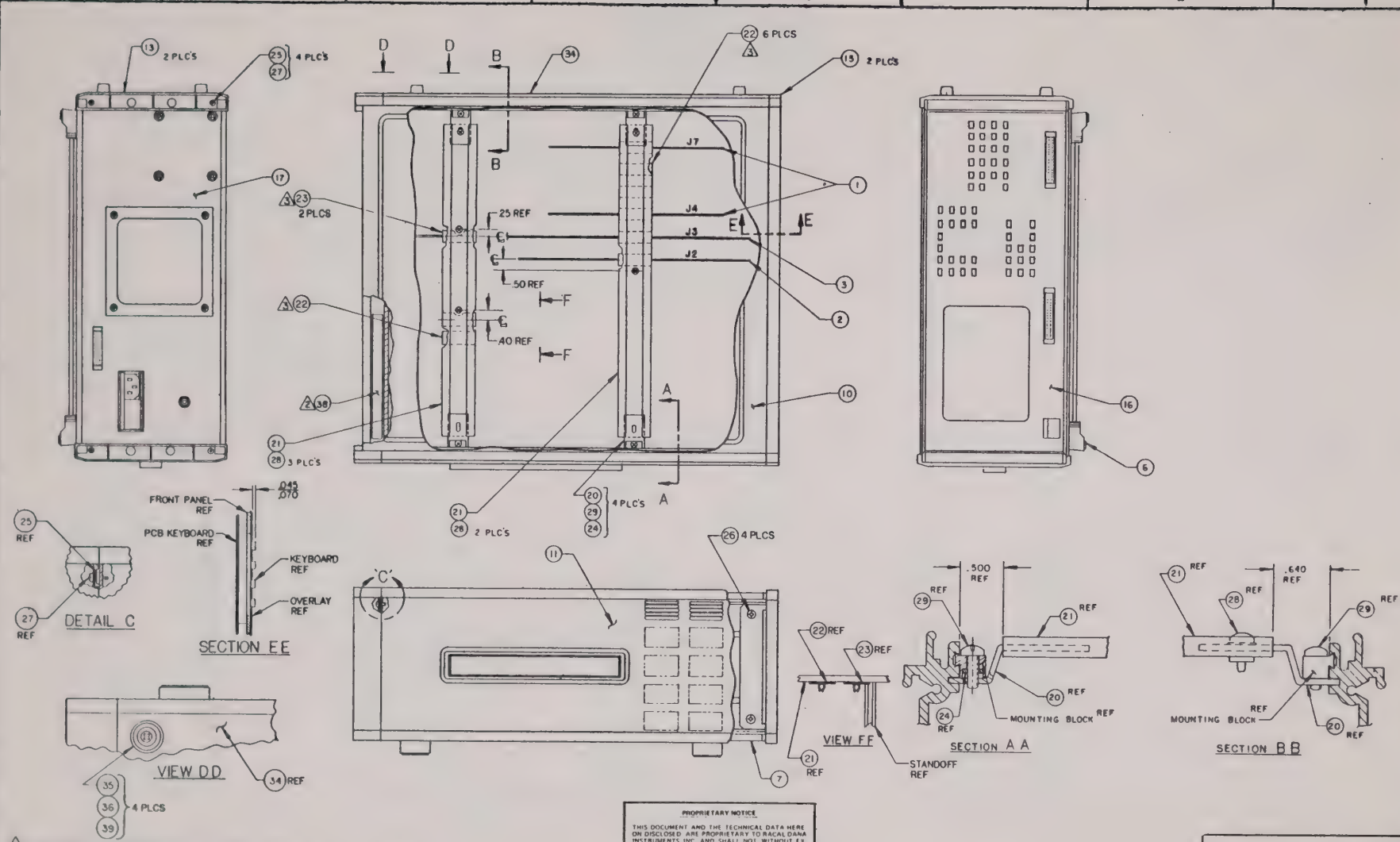

2 USE FIXTURE NO T404251-1 P/N990218 TO LOCATE ITEMS 22 AND 23 ON 1" CENTERS.

1 TYPE PERTINENT DATA ON SERIAL NO. TAG, ATTACH TAG APPROXIMATELY WHERE SHOWN.

1. ASSEMBLY PROCESSES AND PROCEDURES TO CONFORM TO RACAL-DANA WORKMANSHIP STANDARD.

NOTES: UNLESS OTHERWISE SPECIFIED

PROPRIETARY NOTICE

THIS DOCUMENT AND THE TECHNICAL DATA HERE ON DISCLOSED ARE PROPRIETARY TO RACAL DANA INSTRUMENTS INC. AND SHALL NOT, WITHOUT EXPRESS WRITTEN PERMISSION OF RACAL DANA INSTRUMENTS INC BE USED, RELEASED OR DISCLOSED IN WHOLE OR IN PART OR USED TO SOLICIT QUOTATIONS FROM A COMPETITIVE SOURCE OR USED FOR MANUFACTURE BY ANYONE OTHER THAN RACAL DANA INSTRUMENTS INC. THE INFORMATION HERE ON HAS BEEN DEVELOPED AT PRIVATE EXPENSE AND MAY ONLY BE USED FOR PURPOSES OF ENGINEERING EVALUATION AND FOR INCORPORATION INTO TECHNICAL SPECIFICATIONS AND OTHER DOCUMENTS WHICH SPECIFY PROCUREMENT OF PRODUCTS FROM RACAL DANA INSTRUMENTS INC.

ANLYZR ASSY, LGC STATE

SIZE	CODE IDENT NO	DWG NO	REV
D	21793	404251	E

SCALE NONE SHEET 1 OF 3

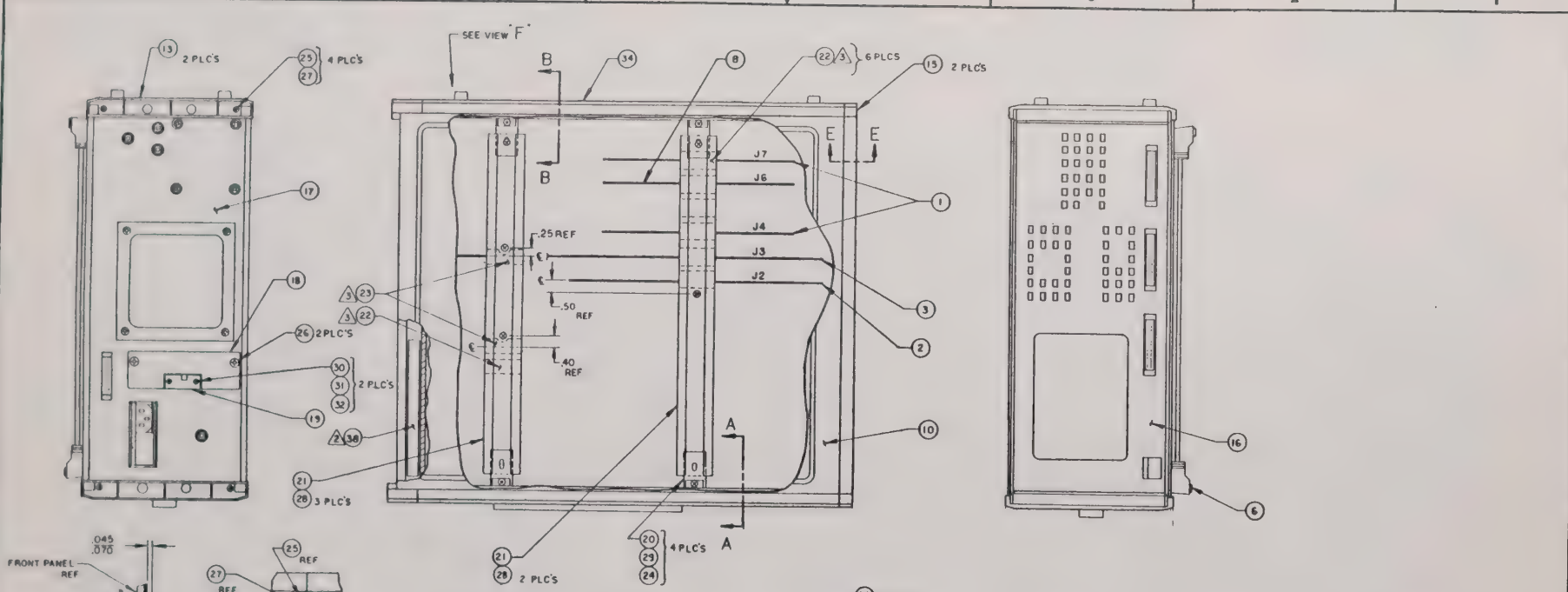

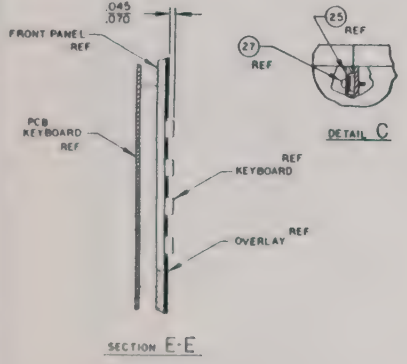

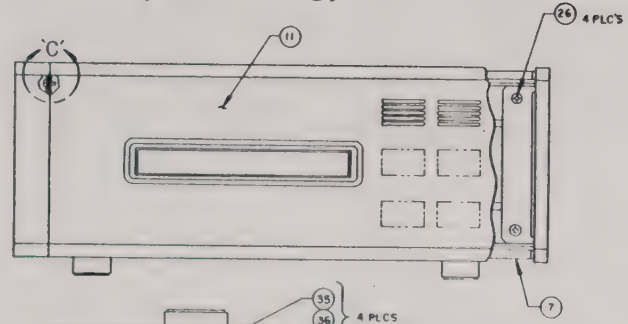

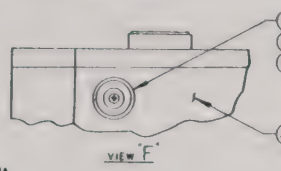

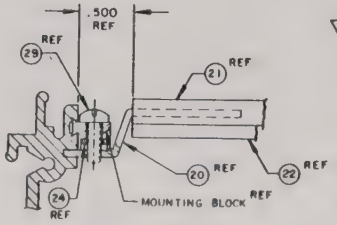

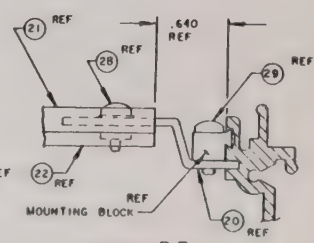

3. USE FIXTURE NO. T4042141 P/N 990210 TO LOCATE ITEMS 22 AND 23 ON 1" CENTERS.

2. TYPE PERTINENT DATA ON SERIAL NO. TAG, ATTACH TAG APPROXIMATELY WHERE SHOWN.

1. ASSEMBLY PROCESSES AND PROCEDURES TO CONFORM TO RACAL-DANA WORKMANSHIP STANDARD.

NOTES: UNLESS OTHERWISE SPECIFIED

PROPRIETARY NOTICE

THIS DOCUMENT AND THE TECHNICAL DATA HERE ON DISCLOSED ARE PROPRIETARY TO RACAL DANA INSTRUMENTS INC AND SHALL NOT WITHOUT EX PRESS WRITTEN PERMISSION OF RACAL DANA IN STRUMENTS INC BE USED RELEASED OR DISCLOSED IN WHOLE OR IN PART OR USED TO SOLICIT DUCTA TIONS FROM A COMPETITIVE SOURCE OR USED FOR MANUFACTURE BY ANYONE OTHER THAN RACAL DANA INSTRUMENTS INC THE INFORMATION HERE ON HAS BEEN DEVELOPED AT PRIVATE EXPENSE AND MAY ONLY BE USED FOR PURPOSES OF ENGI NEERING EVALUATION AND FOR INCORPORATION INTO TECHNICAL SPECIFICATIONS AND OTHER DOC UMENTS WHICH SPECIFY PROCUREMENT OF PRO DUCTS FROM RACAL DANA INSTRUMENTS INC

ANALYZER ASSY., LOGIC

SIZE	CODE IDENT NO	DWG NO.	REV
D	21793	404214	J

SCALE NONE SHEET 1 OF 3

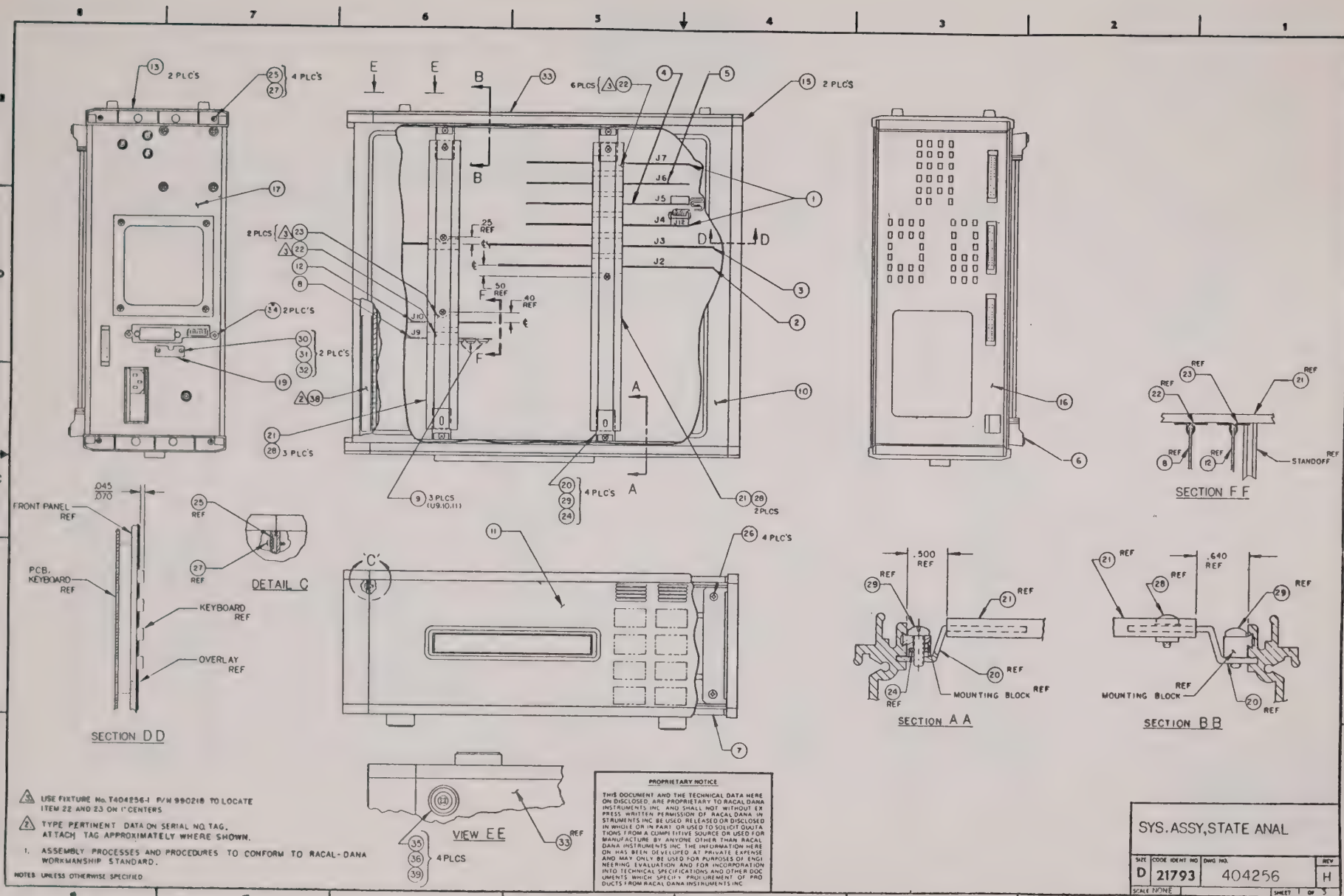

⚠5 USE FIXTURE No. T404256-1 P/N 990218 TO LOCATE ITEM 22 AND 23 ON 1" CENTERS

⚠2 TYPE PERTINENT DATA ON SERIAL NO. TAG, ATTACH TAG APPROXIMATELY WHERE SHOWN.

1. ASSEMBLY PROCESSES AND PROCEDURES TO CONFORM TO RACAL-DANA WORKMANSHIP STANDARD.

NOTES: UNLESS OTHERWISE SPECIFIED

PROPRIETARY NOTICE

THIS DOCUMENT AND THE TECHNICAL DATA HERE ON DISCLOSED ARE PROPRIETARY TO RACAL DANA INSTRUMENTS INC AND SHALL NOT WITHOUT EXPRESS WRITTEN PERMISSION OF RACAL DANA INSTRUMENTS INC BE USED RELEASED OR DISCLOSED IN WHOLE OR IN PART OR USED TO SOLICIT QUOTATIONS FROM A COMPETITIVE SOURCE OR USED FOR MANUFACTURE BY ANYONE OTHER THAN RACAL DANA INSTRUMENTS INC THE INFORMATION HERE ON HAS BEEN DEVELOPED AT PRIVATE EXPENSE AND MAY ONLY BE USED FOR PURPOSES OF ENGINEERING EVALUATION AND FOR INCORPORATION INTO TECHNICAL SPECIFICATIONS AND OTHER DOCUMENTS WHICH SPECIFY PROCUREMENT OF PRODUCTS FROM RACAL DANA INSTRUMENTS INC

SYS. ASSY, STATE ANAL

SIZE	CODE IDENT NO	DWG NO.	REV
D	21793	404256	H

SCALE NONE SHEET 1 OF 5

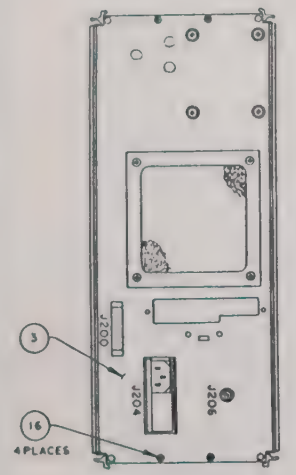

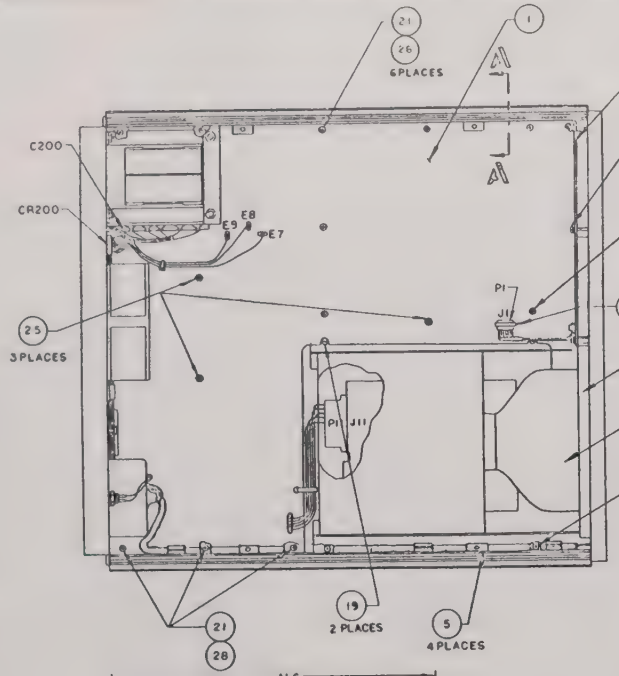

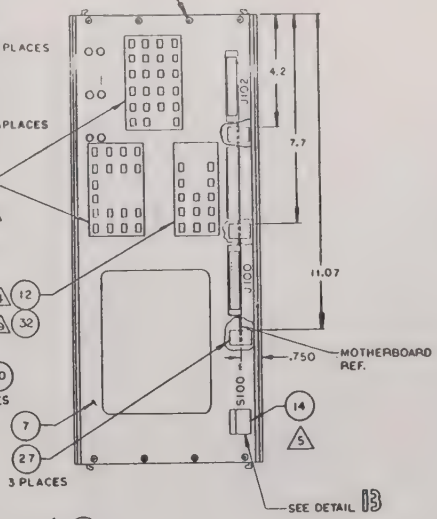

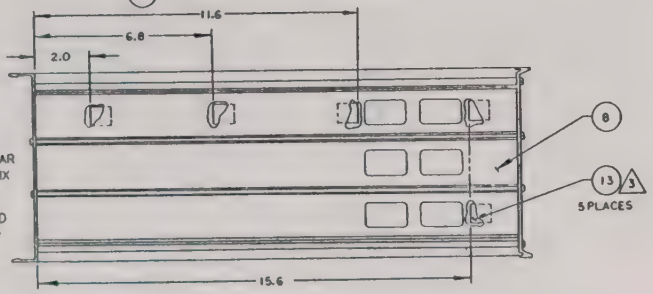

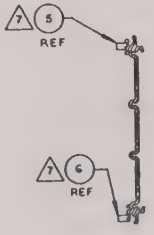

SECTION A1-A1

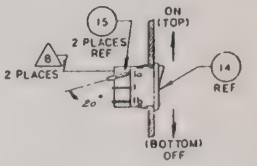

DETAIL 13

⚠ AT BOTH LOCATIONS SHOWN INSTALL ONE EACH OF ITEM 33 (MYLAR SPACER) BETWEEN ITEM 4 (4X6 KEYBOARD) AND 4X6 SWITCH MATRIX (600958) OF ITEM 2 (KEYBOARD ASSY)

⚠ INSTALL ITEM 32 MYLAR SPACER BETWEEN ITEM 12 3X6 KEYBOARD AND 3X6 SWITCH MATRIX (454599) OF ITEM 2 (KEYBOARD ASSY)

⚠ PRIOR TO INSTALLING ITEMS 14 AND 15, FORM LUGS 1a AND 2a DOWNWARD AT APPROX. 20°.

⚠ INSTALL AND ORIENT ITEMS 5 & 6 AS SHOWN.

⚠ SLEEVING ON S100 WIRING MUST PROTECT WIRING FROM COMING IN CONTACT WITH CRT HOUSING AT S100.

⚠ ADD ITEM 15 A/R TO UNUSED LUG NO'S 1a, 2a ON ITEM 14.

⚠ BREAK OFF KEYS 12 PLACES AS SHOWN ON ITEMS 4 & 12.

⚠ LOCATE ITEM 13 AGAINST INSIDE OF SIDE PANEL, CENTRALLY LOCATED BETWEEN RIBS AS SHOWN, 5 PLACES.

2. SEE WIRE LIST SHEETS 3-5 FOR TERMINATION OF WIRES.

1. ASSEMBLY PROCESSES & PROCEDURES TO CONFORM TO RACAL-DANA STANDARD.

NOTES: UNLESS OTHERWISE SPECIFIED

PROPRIETARY NOTICE

THIS DOCUMENT AND THE TECHNICAL DATA HEREIN DISCLOSED ARE PROPRIETARY TO RACAL-DANA INSTRUMENTS INC. AND SHALL NOT WITHOUT EXPRESS WRITTEN PERMISSION OF RACAL-DANA INSTRUMENTS INC BE USED RELEASED OR DISCLOSED IN WHOLE OR IN PART OR USED TO SOLICIT QUOTATIONS FROM A COMPETITIVE SOURCE OR ... IT FOR MANUFACTURE BY ANYONE OTHER THAN RACAL-DANA INSTRUMENTS INC. THE INFORMATION HEREIN HAS BEEN DEVELOPED AT PRIVATE EXPENSE AND MAY ONLY BE USED FOR PURPOSES OF ENGINEERING EVALUATION AND FOR INCORPORATION INTO TECHNICAL SPECIFICATIONS AND OTHER DOCUMENTS WHICH SPECIFY PROCUREMENT OF PRODUCTS FROM RACAL-DANA INSTRUMENTS INC.

CHASSIS ASSY

SIZE	CODE IDENT NO	DWG NO	REV
D	21793	404252	J

SCALE NONE | SHEET 1 OF 5

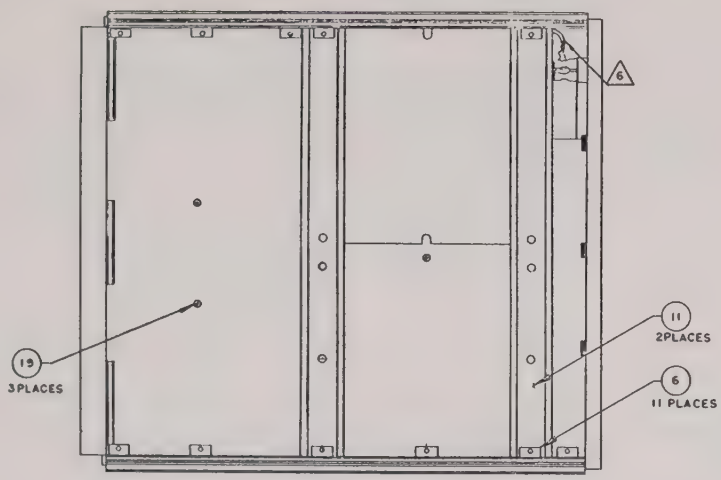

BOTTOM VIEW

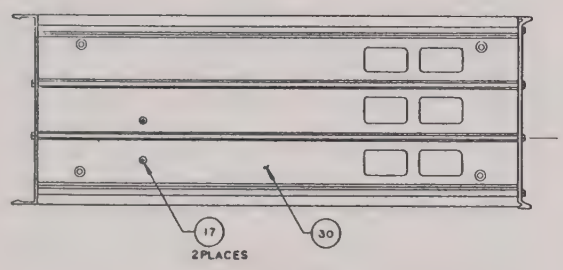

PROPRIETARY NOTICE

THIS DOCUMENT AND THE TECHNICAL DATA HERE ON DISCLOSED ARE PROPRIETARY TO DANA LABORATORIES, INC., AND SHALL NOT WITHOUT EXPRESS WRITTEN PERMISSION OF DANA LABORATORIES INC BE USED RELEASED OR DISCLOSED IN WHOLE OR IN PART OR USED TO SOLICIT QUOTATIONS FROM A COMPETITIVE SOURCE OR USED FOR MANUFACTURE BY ANYONE OTHER THAN DANA LABORATORIES INC. THE INFORMATION HEREIN HAS BEEN DEVELOPED AT PRIVATE EXPENSE AND MAY ONLY BE USED FOR PURPOSES OF ENGINEERING EVALUATION AND FOR INCORPORATION INTO TECHNICAL SPECIFICATIONS AND OTHER DOCUMENTS WHICH SPECIFY PROCUREMENT OF PRODUCTS FROM DANA LABORATORIES INC.

NOTES: UNLESS OTHERWISE SPECIFIED

SIZE	CODE IDENT NO	DWG NO.	REV
D	21793	404252	J
SCALE NONE		SHEET 2 OF 5	

10-7

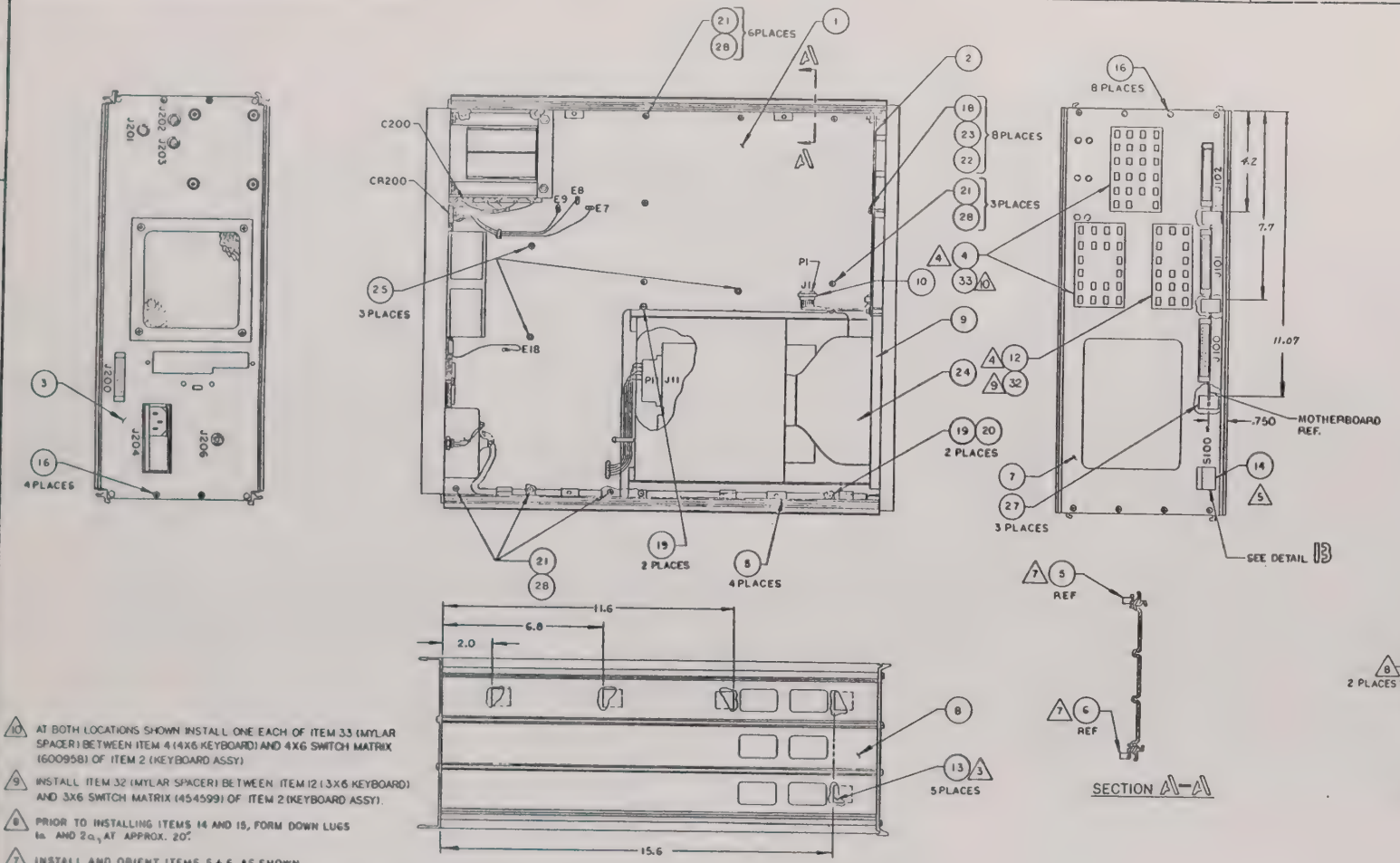

10 AT BOTH LOCATIONS SHOWN INSTALL ONE EACH OF ITEM 33 (MYLAR SPACER) BETWEEN ITEM 4 (4X6 KEYBOARD) AND 4X6 SWITCH MATRIX (600958) OF ITEM 2 (KEYBOARD ASSY)

9 INSTALL ITEM 32 (MYLAR SPACER) BETWEEN ITEM 12 (3X6 KEYBOARD) AND 3X6 SWITCH MATRIX (454599) OF ITEM 2 (KEYBOARD ASSY).

8 PRIOR TO INSTALLING ITEMS 14 AND 15, FORM DOWN LUGS 1a AND 2a, AT APPROX. 20°

7 INSTALL AND ORIENT ITEMS 5 & 6 AS SHOWN.

6 SLEEVING ON S100 WIRING MUST PROTECT WIRING FROM COMING IN CONTACT WITH CRT HOUSING AT S100

5 ADD ITEM 15 TO UNUSED LUG NO'S 1a, 2a ON ITEM 14.

4 BREAK OFF BUTTONS 7 PLACES AS SHOWN.

3 LOCATE ITEM 13 AGAINST INSIDE OF SIDE PANEL, CENTRALLY LOCATED BETWEEN RIBS AS SHOWN, 5 PLACES.

2. SEE WIRE LIST SHEETS 3-5 FOR TERMINATION OF WIRES.

1. ASSEMBLY PROCESSES & PROCEDURES TO CONFORM TO RACAL-DANA STANDARD.

NOTES: UNLESS OTHERWISE SPECIFIED

PROPRIETARY NOTICE

THIS DOCUMENT AND THE TECHNICAL DATA HERE ON DISCLOSED ARE PROPRIETARY TO RACAL DANA INSTRUMENTS INC AND SHALL NOT WITHOUT EXPRESS WRITTEN PERMISSION OF RACAL DANA INSTRUMENTS INC BE USED RELEASED OR DISCLOSED IN WHOLE OR IN PART OR USED TO SOLICIT QUOTATIONS FROM A COMPETITIVE SOURCE OR USED FOR MANUFACTURE BY ANYONE OTHER THAN RACAL DANA INSTRUMENTS INC. THE INFORMATION HERE ON HAS BEEN DEVELOPED AT PRIVATE EXPENSE AND MAY ONLY BE USED FOR PURPOSES OF EVALUATION AND FOR INCORPORATION INTO TECHNICAL SPECIFICATIONS AND OTHER DOCUMENTS WHICH SPECIFY PROCUREMENT OF PRODUCTS FROM RACAL DANA INSTRUMENTS INC

CHASSIS ASSY

SIZE	CODE IDENT NO	DWG NO.	REV
D	21793	404215	L

SCALE FULL | SHEET 1 OF 5

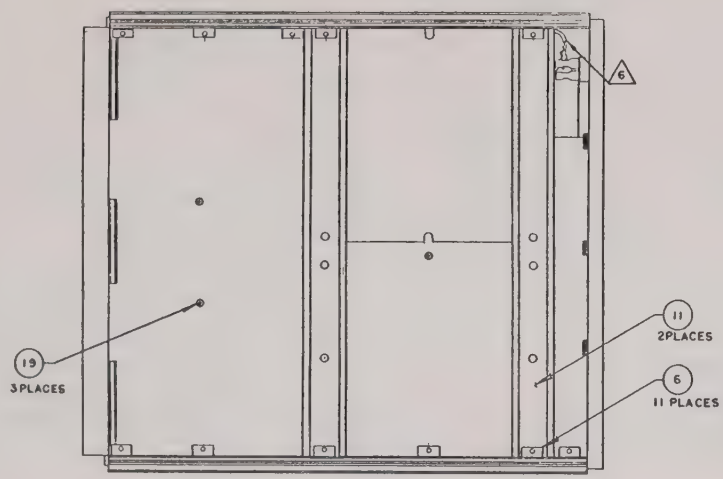

BOTTOM VIEW

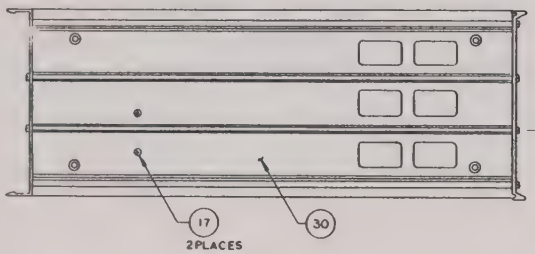

PROPRIETARY NOTICE

THIS DOCUMENT AND THE TECHNICAL DATA HERE ON DISCLOSED, ARE PROPRIETARY TO DANA LABORATORIES, INC., AND SHALL NOT WITHOUT EXPRESS WRITTEN PERMISSION OF DANA LABORATORIES INC BE USED RELEASED OR DISCLOSED IN WHOLE OR IN PART, OR USED TO SOLICIT QUOTATIONS FROM A COMPETITIVE SOURCE OR USED FOR MANUFACTURE BY ANYONE OTHER THAN DANA LABORATORIES, INC. THE INFORMATION HEREON HAS BEEN DEVELOPED AT PRIVATE EXPENSE AND MAY ONLY BE USED FOR PURPOSES OF ENGINEERING EVALUATION AND FOR INCORPORATION INTO TECHNICAL SPECIFICATIONS AND OTHER DOCUMENTS WHICH SPECIFY PROCUREMENT OF PRODUCTS FROM DANA LABORATORIES, INC.

SIZE	CODE IDENT NO.	DWG NO.	REV
D	21793	404215	L

SCALE NONE SHEET 2 OF 5

NOTES: UNLESS OTHERWISE SPECIFIED

10-9

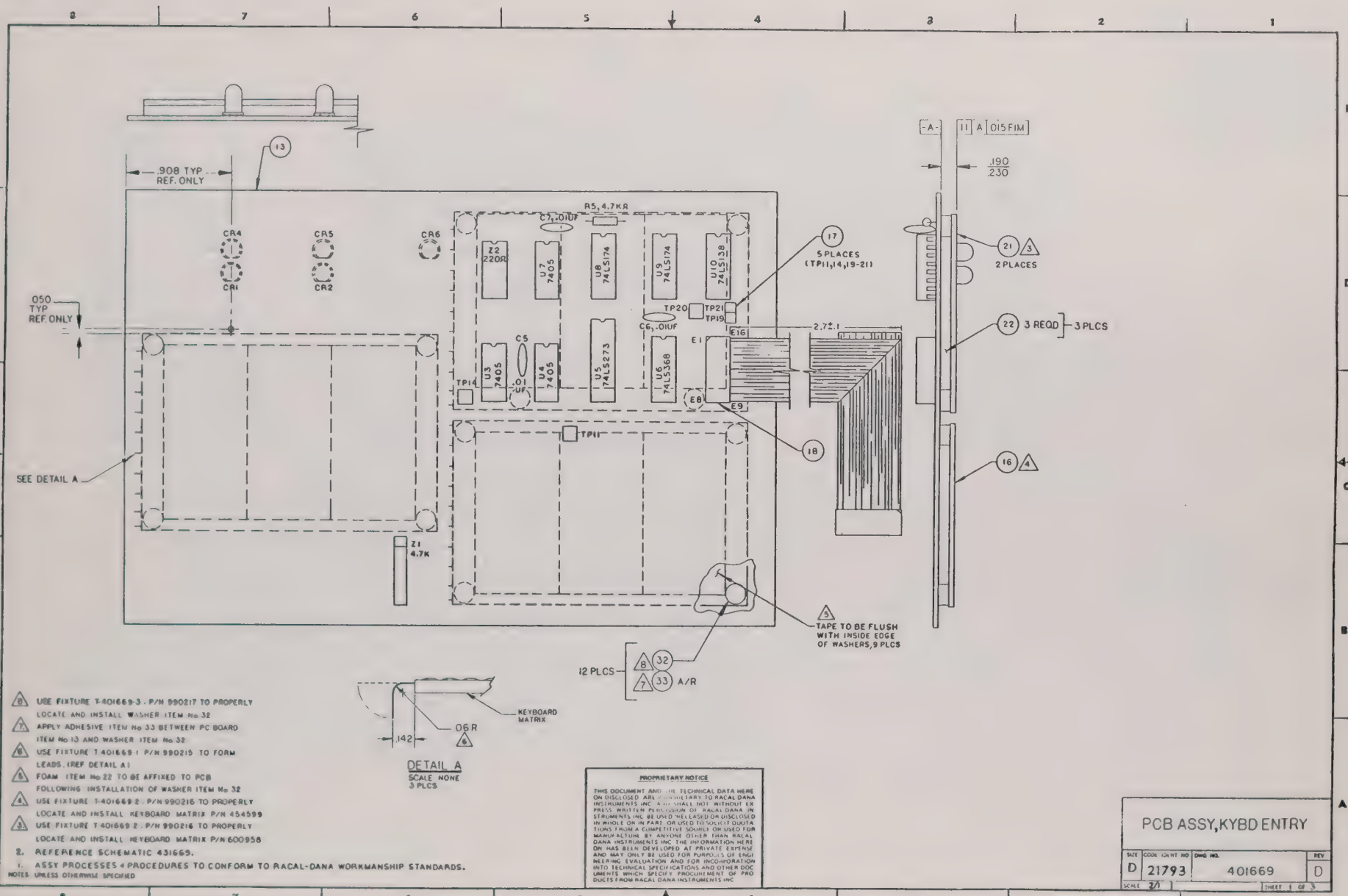

NOTES UNLESS OTHERWISE SPECIFIED

1. ASSY PROCESSES & PROCEDURES TO CONFORM TO RACAL-DANA WORKMANSHIP STANDARDS.
2. REFERENCE SCHEMATIC 431669.
3. USE FIXTURE T-401669-2 . P/N 990216 TO PROPERLY LOCATE AND INSTALL KEYBOARD MATRIX P/N 454599
4. USE FIXTURE T-401669-2 . P/N 990216 TO PROPERLY LOCATE AND INSTALL KEYBOARD MATRIX P/N 600958
5. FOAM ITEM No 22 TO BE AFFIXED TO PCB FOLLOWING INSTALLATION OF WASHER ITEM No 32
6. USE FIXTURE T-401669-1 P/N 990215 TO FORM LEADS. (REF DETAIL A)
7. APPLY ADHESIVE ITEM No 33 BETWEEN PC BOARD ITEM No 13 AND WASHER ITEM No 32
8. USE FIXTURE T-401669-3 . P/N 990217 TO PROPERLY LOCATE AND INSTALL WASHER ITEM No 32

PROPRIETARY NOTICE

THIS DOCUMENT AND THE TECHNICAL DATA HERE ON DISCLOSED ARE PROPRIETARY TO RACAL DANA INSTRUMENTS INC AND SHALL NOT WITHOUT EXPRESS WRITTEN PERMISSION OF RACAL DANA INSTRUMENTS INC BE USED RELEASED OR DISCLOSED IN WHOLE OR IN PART OR USED TO SOLICIT QUOTATIONS FROM A COMPETITIVE SOURCE OR USED FOR MANUFACTURE BY ANYONE OTHER THAN RACAL DANA INSTRUMENTS INC THE INFORMATION HERE ON HAS BEEN DEVELOPED AT PRIVATE EXPENSE AND MAY ONLY BE USED FOR PURPOSES OF ENGINEERING EVALUATION AND FOR INCORPORATION INTO TECHNICAL SPECIFICATIONS AND OTHER DOCUMENTS WHICH SPECIFY PROCUREMENT OF PRODUCTS FROM RACAL DANA INSTRUMENTS INC

PCB ASSY, KYBD ENTRY

SIZE	CODE IDENT NO	DWG NO.	REV
D	21793	401669	D

SCALE 2/1 SHEET 1 OF 3

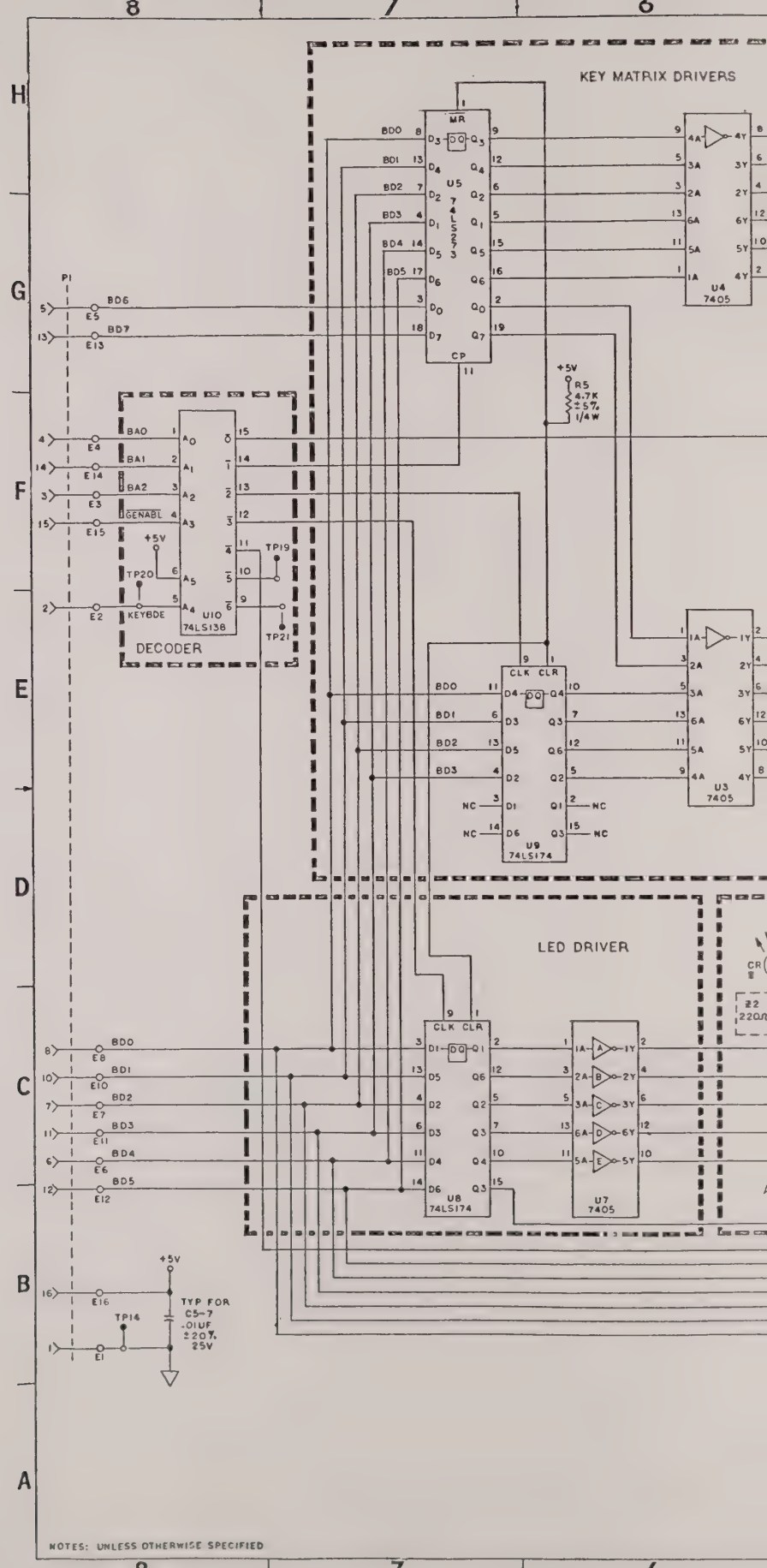
KEY MATRIX DRIVERS
LED DRIVER
DECODER
U5
74LS373
U4
7405
U3
7405
U7
7405
U8
74LS174
U9
74LS174
U10
74LS138
P1
BD0
BD1
BD2
BD3
BD4
BD5
BD6
BD7
BA0
BA1
BA2
GENABL
KEYBDE
+5V
R5
4.7K
±5%
1/4W
TP19
TP20
TP21
TP14
E1
E2
E3
E4
E5
E6
E7
E8
E10
E11
E12
E13
E14
E15
E16
TYP FOR
C5-7
.01UF
±20%
25V
NOTES: UNLESS OTHERWISE SPECIFIED

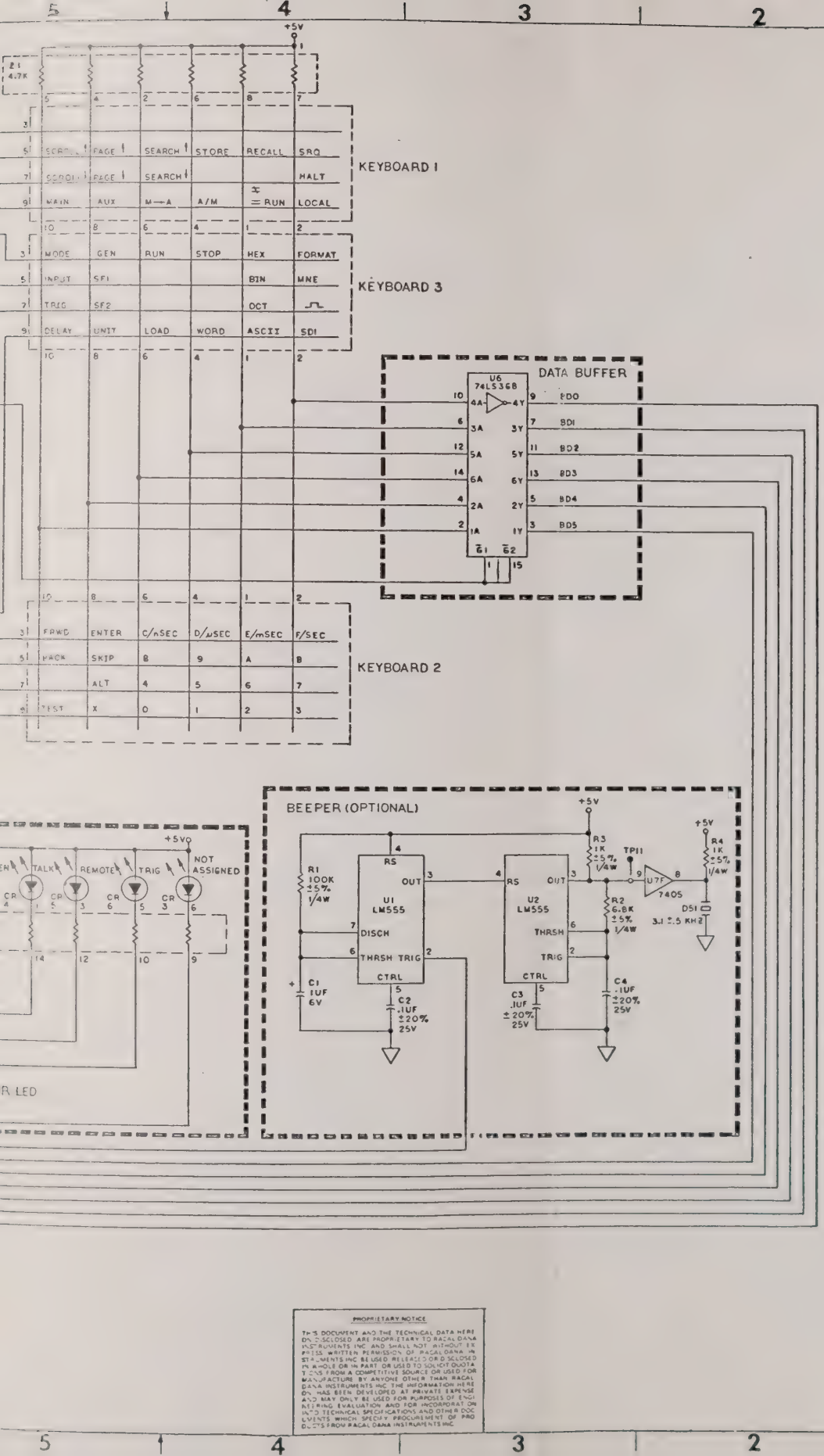

Z2	
U10	
TP21	TP1 10 J2 13 15-18
R5	
E16	
D51	
CR6	
C7	
HIGHEST	NOT USED
REFERENCE DESIGNATIO	

Z2	220Ω	7,8
Z1	4.7K	3
U9	74LS174	14,15
U9	74LS174	2,3
DES	TYPE	PINS
UNUSED LOGIC + NETWORK		

U10	74LS138	16	8
U8,9	74LS174	16	8
U6	74368	16	8
U5	74LS273	20	10
U3,4,7	7405	14	7
U1,2	LM555	8	1
REF DES	IC TYPE	+5V PIN NO	GND PIN NO

PROPRIETARY NOTICE

THIS DOCUMENT AND THE TECHNICAL DATA HERE DISCLOSED ARE PROPRIETARY TO RACAL DANA INSTRUMENTS INC AND SHALL NOT WITHOUT EXPRESS WRITTEN PERMISSION OF RACAL DANA INSTRUMENTS INC BE USED RELEASED OR DISCLOSED IN WHOLE OR IN PART OR USED TO SOLICIT QUOTATIONS FROM A COMPETITIVE SOURCE OR USED FOR MANUFACTURE BY ANYONE OTHER THAN RACAL DANA INSTRUMENTS INC THE INFORMATION HERE IN HAS BEEN DEVELOPED AT PRIVATE EXPENSE AND MAY ONLY BE USED FOR PURPOSES OF EVALUATING EVALUATION AND FOR INCORPORATION INTO TECHNICAL SPECIFICATIONS AND OTHER DOCUMENTS WHICH SPECIFY PROCUREMENT OF PRODUCTS FROM RACAL DANA INSTRUMENTS INC

SCHEM, KEYBOARD ENTRY

SIZE	DRAWING NO	DWG NO
E	21793	431689

10-11/10-12 Blan

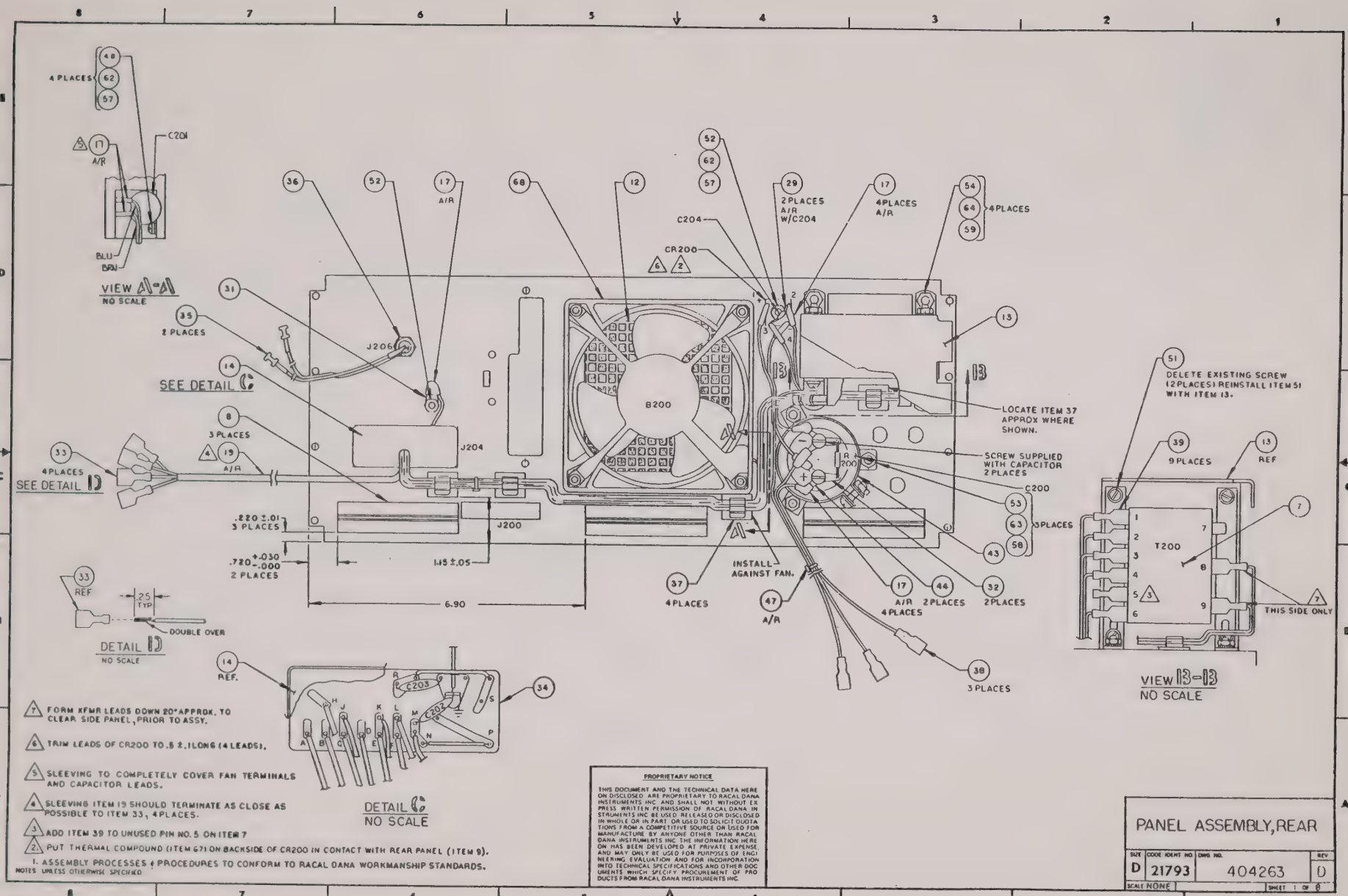

7 FORM XFMR LEADS DOWN 20° APPROX. TO CLEAR SIDE PANEL, PRIOR TO ASSY.

6 TRIM LEADS OF CR200 TO .8 ±.1 LONG (4 LEADS).

5 SLEEVING TO COMPLETELY COVER FAN TERMINALS AND CAPACITOR LEADS.

4 SLEEVING ITEM 19 SHOULD TERMINATE AS CLOSE AS POSSIBLE TO ITEM 33, 4 PLACES.

3 ADD ITEM 39 TO UNUSED PIN NO. 5 ON ITEM 7

2 PUT THERMAL COMPOUND (ITEM 67) ON BACKSIDE OF CR200 IN CONTACT WITH REAR PANEL (ITEM 9).

1. ASSEMBLY PROCESSES & PROCEDURES TO CONFORM TO RACAL DANA WORKMANSHIP STANDARDS.

NOTES UNLESS OTHERWISE SPECIFIED

PROPRIETARY NOTICE

THIS DOCUMENT AND THE TECHNICAL DATA HERE ON DISCLOSED ARE PROPRIETARY TO RACAL DANA INSTRUMENTS INC AND SHALL NOT WITHOUT EXPRESS WRITTEN PERMISSION OF RACAL DANA INSTRUMENTS INC BE USED RELEASED OR DISCLOSED IN WHOLE OR IN PART OR USED TO SOLICIT QUOTATIONS FROM A COMPETITIVE SOURCE OR USED FOR MANUFACTURE BY ANYONE OTHER THAN RACAL DANA INSTRUMENTS INC. THE INFORMATION HERE ON HAS BEEN DEVELOPED AT PRIVATE EXPENSE AND MAY ONLY BE USED FOR PURPOSES OF ENGINEERING EVALUATION AND FOR INCORPORATION INTO TECHNICAL SPECIFICATIONS AND OTHER DOCUMENTS WHICH SPECIFY PROCUREMENT OF PRODUCTS FROM RACAL DANA INSTRUMENTS INC.

PANEL ASSEMBLY, REAR

SIZE	CODE IDENT NO	DWG NO	REV
D	21793	404263	D

SCALE NONE SHEET 1 OF 8

10-13

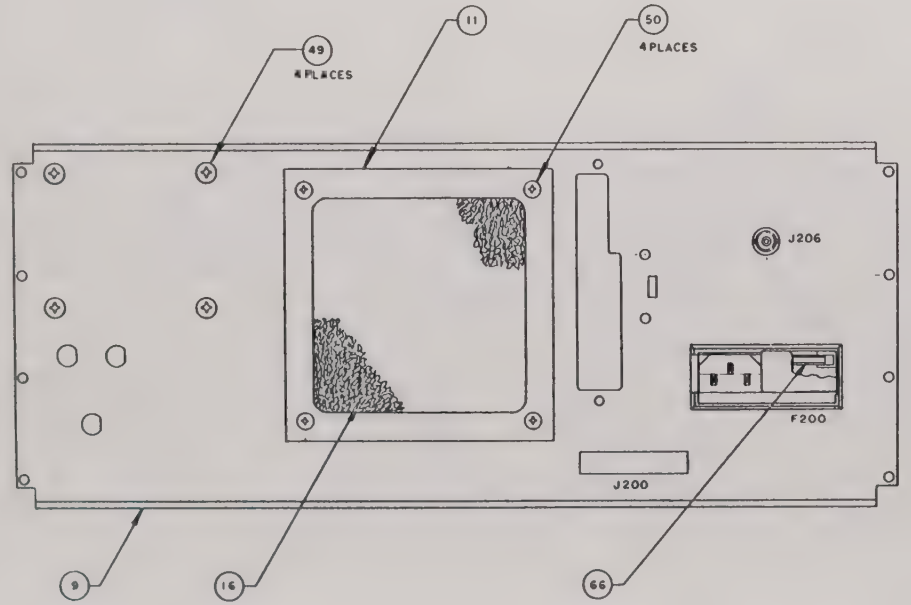

NOTES: UNLESS OTHERWISE SPECIFIED

PROPRIETARY NOTICE
THIS DOCUMENT AND THE TECHNICAL DATA HEREON DISCLOSED, ARE PROPRIETARY TO DANA LABORATORIES INC. AND SHALL NOT WITHOUT EXPRESS WRITTEN PERMISSION OF DANA LABORATORIES INC BE USED RELEASED OR DISCLOSED IN WHOLE OR IN PART OR USED TO SOLICIT QUOTATIONS FROM A COMPETITIVE SOURCE OR USED FOR MANUFACTURE BY ANYONE OTHER THAN DANA LABORATORIES, INC. THE INFORMATION HEREON HAS BEEN DEVELOPED AT PRIVATE EXPENSE, AND MAY ONLY BE USED FOR PURPOSES OF ENGINEERING EVALUATION AND FOR INCORPORATION INTO TECHNICAL SPECIFICATIONS AND OTHER DOCUMENTS WHICH SPECIFY PROCUREMENT OF PRODUCTS FROM DANA LABORATORIES INC.

SIZE	CODE IDENT NO	DWG NO.	REV
D	21793	404263	D
SCALE NONE		SHEET 2 OF 8	

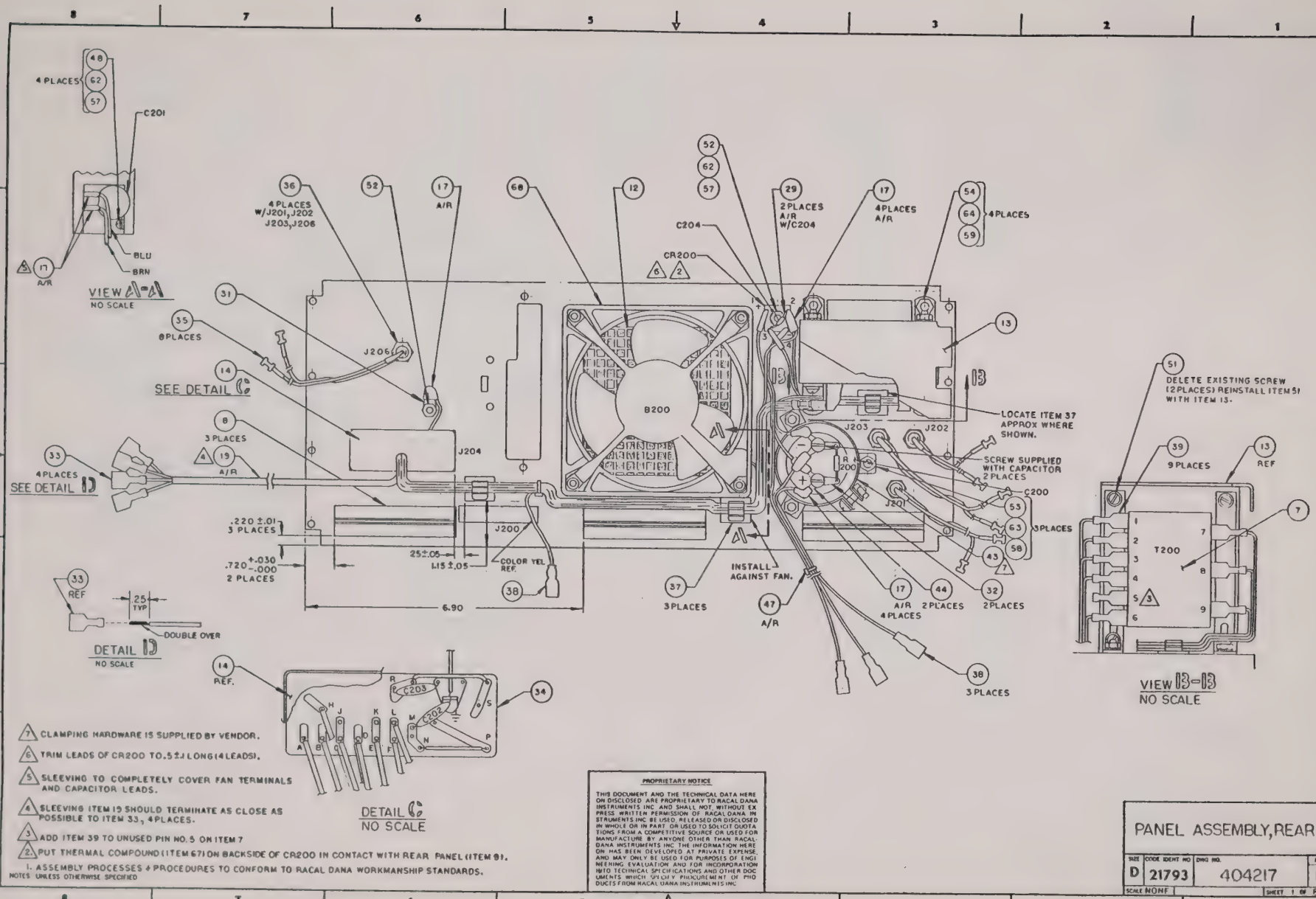

7. CLAMPING HARDWARE IS SUPPLIED BY VENDOR.
6. TRIM LEADS OF CR200 TO .5±.1 LONG (4 LEADS).
5. SLEEVING TO COMPLETELY COVER FAN TERMINALS AND CAPACITOR LEADS.
4. SLEEVING ITEM 19 SHOULD TERMINATE AS CLOSE AS POSSIBLE TO ITEM 33, 4 PLACES.
3. ADD ITEM 39 TO UNUSED PIN NO. 5 ON ITEM 7
2. PUT THERMAL COMPOUND (ITEM 67) ON BACKSIDE OF CR200 IN CONTACT WITH REAR PANEL (ITEM 8).
1. ASSEMBLY PROCESSES & PROCEDURES TO CONFORM TO RACAL DANA WORKMANSHIP STANDARDS.

NOTES: UNLESS OTHERWISE SPECIFIED

PROPRIETARY NOTICE

THIS DOCUMENT AND THE TECHNICAL DATA HERE ON DISCLOSED ARE PROPRIETARY TO RACAL DANA INSTRUMENTS INC AND SHALL NOT, WITHOUT EX PRESS WRITTEN PERMISSION OF RACAL DANA IN STRUMENTS INC BE USED, RELEASED OR DISCLOSED IN WHOLE OR IN PART OR USED TO SOLICIT QUOTA TIONS FROM A COMPETITIVE SOURCE OR USED FOR MANUFACTURE BY ANYONE OTHER THAN RACAL DANA INSTRUMENTS INC THE INFORMATION HERE ON HAS BEEN DEVELOPED AT PRIVATE EXPENSE AND MAY ONLY BE USED FOR PURPOSES OF ENGI NEERING EVALUATION AND FOR INCORPORATION INTO TECHNICAL SPECIFICATIONS AND OTHER DOC UMENTS WHICH SPECIFY PROCUREMENT OF PRO DUCTS FROM RACAL DANA INSTRUMENTS INC

PANEL ASSEMBLY, REAR

SIZE	CODE IDENT NO	DWG NO.	REV
D	21793	404217	D

SCALE NONE SHEET 1 OF 4

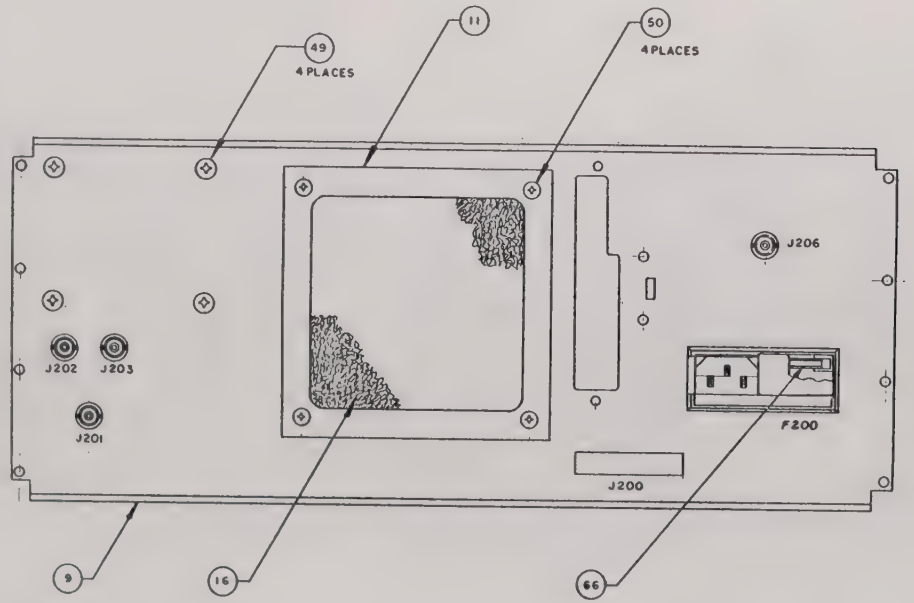

NOTES: UNLESS OTHERWISE SPECIFIED

PROPRIETARY NOTICE

THIS DOCUMENT AND THE TECHNICAL DATA HERE ON DISCLOSED ARE PROPRIETARY TO DANA LABORATORIES INC. AND, SHALL NOT WITHOUT EXPRESS WRITTEN PERMISSION OF DANA LABORATORIES INC BE USED RELEASED OR DISCLOSED IN WHOLE OR IN PART OR USED TO SOLICIT QUOTATIONS FROM A COMPETITIVE SOURCE OR USED FOR MANUFACTURE BY ANYONE OTHER THAN DANA LABORATORIES INC. THE INFORMATION HEREON HAS BEEN DEVELOPED AT PRIVATE EXPENSE AND MAY ONLY BE USED FOR PURPOSES OF ENGINEERING EVALUATION AND FOR INCORPORATION INTO TECHNICAL SPECIFICATIONS AND OTHER DOCUMENTS WHICH SPECIFY PROCUREMENT OF PRODUCTS FROM DANA LABORATORIES, INC.

SIZE	CODE IDENT NO.	DWG NO.	REV
D	21793	404217	D

SCALE NONE SHEET 2 OF 4

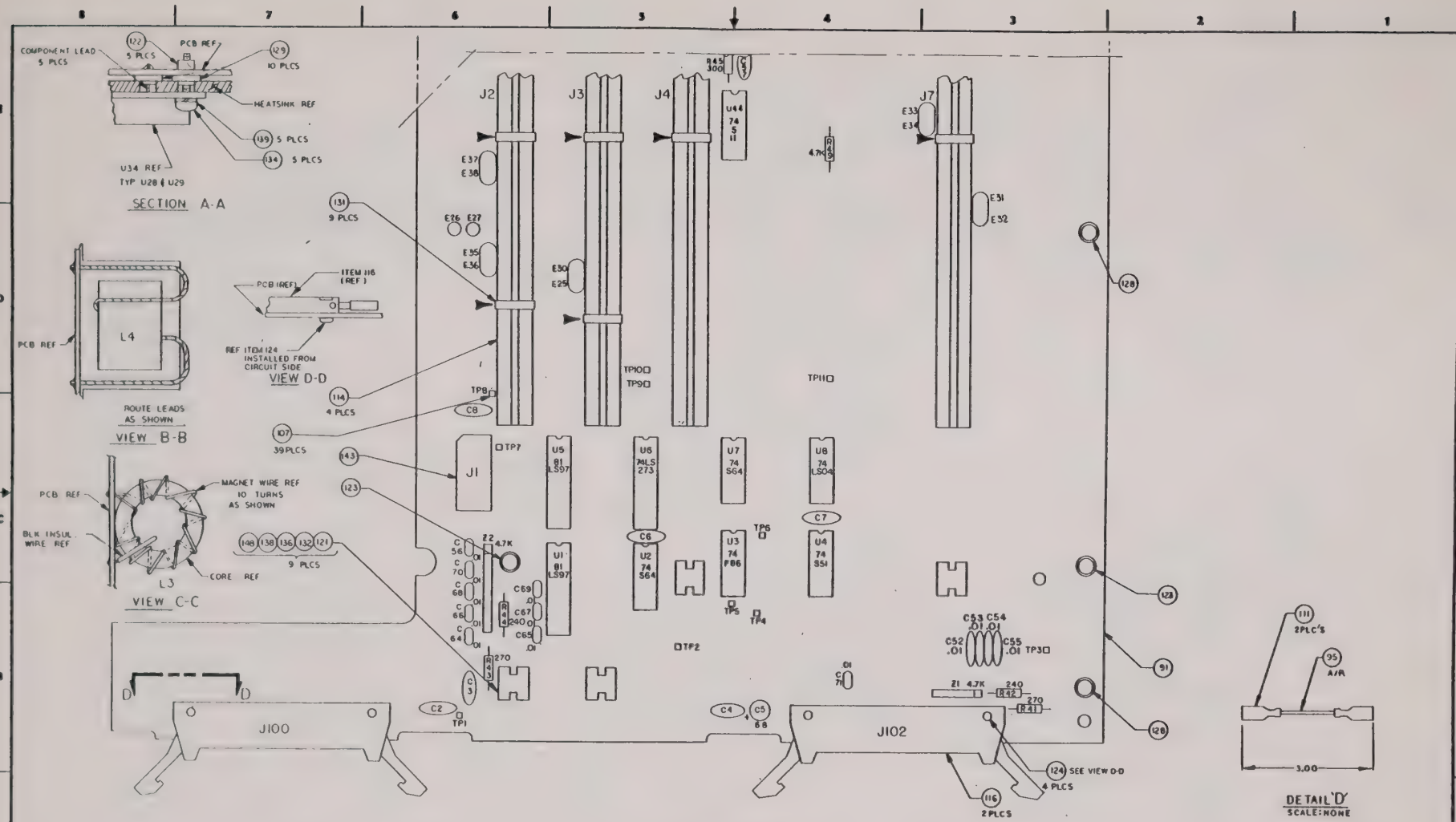

6 APPLY THERMAL COMPOUND, ITEM 141, TO U34 ONLY BEFORE ASSY.
5. C2-4,6-11,13,14,16,17,20-22,24-26,31-33,35,36,39,41-43,45,46,48,50,57-63 ARE .1
4 ALL CAPACITOR VALUES ARE IN MICROFARADS
3. ALL RESISTOR VALUES ARE IN OHMS
2 REFERENCE SCHEMATIC 431668.
1 ASSEMBLE PER RACAL-DANA WORKMANSHIP STANDARD.

NOTES: UNLESS OTHERWISE SPECIFIED

PROPRIETARY NOTICE

THIS DOCUMENT AND THE TECHNICAL DATA HERE ON DISCLOSED ARE PROPRIETARY TO RACAL DANA INSTRUMENTS INC AND SHALL NOT, WITHOUT EXPRESS WRITTEN PERMISSION OF RACAL DANA INSTRUMENTS INC BE USED, RELEASED OR DISCLOSED IN WHOLE OR IN PART, OR USED TO SOLICIT QUOTATIONS FROM A COMPETITIVE SOURCE OR USED FOR MANUFACTURE BY ANYONE OTHER THAN RACAL DANA INSTRUMENTS INC. THE INFORMATION HERE ON HAS BEEN DEVELOPED AT PRIVATE EXPENSE, AND MAY ONLY BE USED FOR PURPOSES OF ENGINEERING EVALUATION AND FOR INCORPORATION INTO TECHNICAL SPECIFICATIONS AND OTHER DOCUMENTS WHICH SPECIFY PROCUREMENT OF PRODUCTS FROM RACAL DANA INSTRUMENTS INC

PCB ASSY, MOTHERBOARD

SIZE	CODE IDENT NO	DWG NO.	REV
D	21793	404264	L

SCALE 2/1 SHEET 1 OF 1

10-17

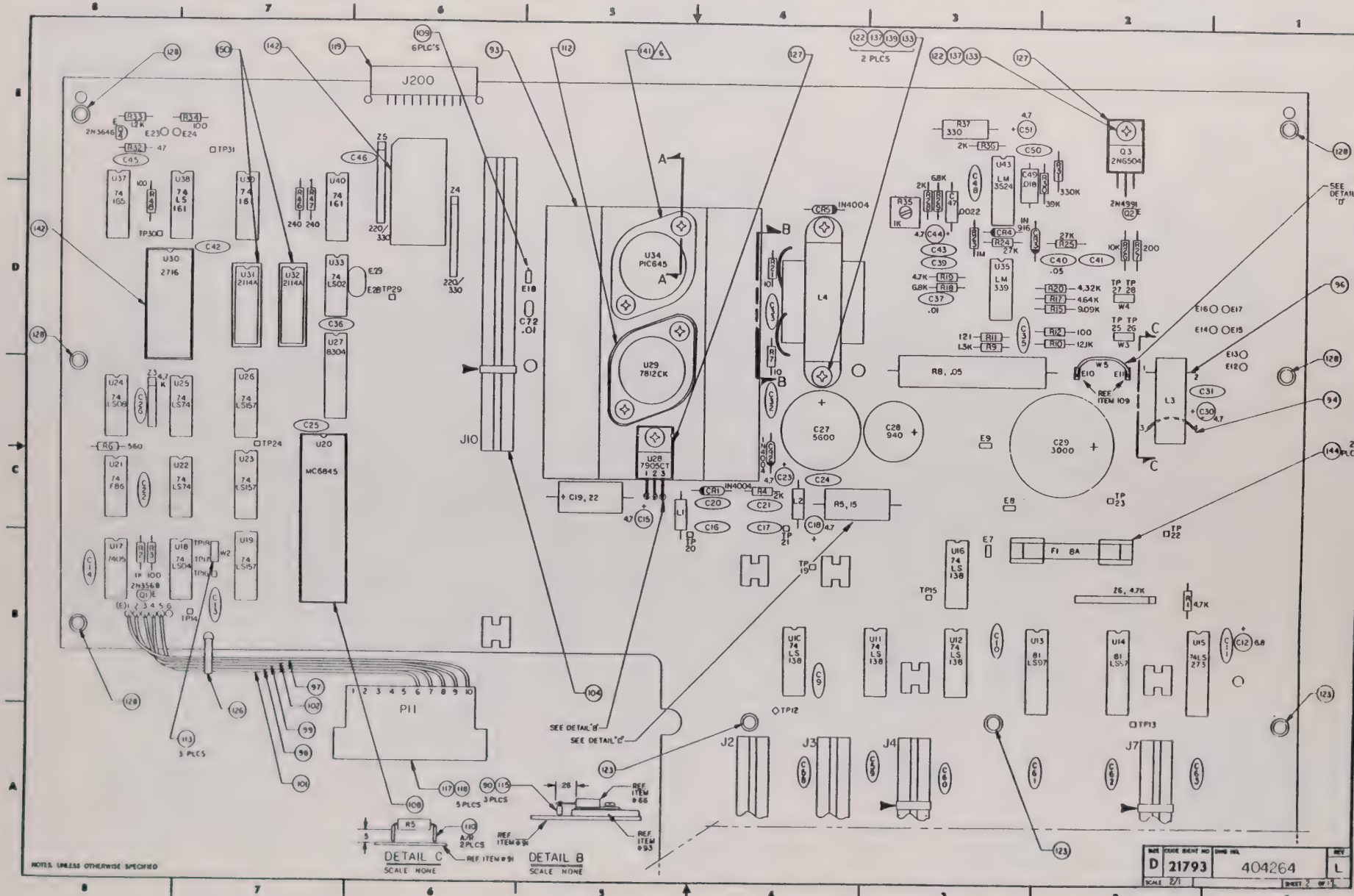
J200
6PLC'S
2 PLCS
U34 PIC645
U29 7812CK
U28 7905CT
MC6845
L4
L3
L1
L2
Q3 2N6504
2N4991
IN4004
C27 5600
C28 940
C29 3000
R8, .05
R5, 15
C19, 22
F1 8A
Z6, 4.7K
P11
J2
J3
J4
J7
J10
3 PLCS
5 PLCS
DETAIL C
SCALE NONE
DETAIL B
SCALE NONE
SEE DETAIL 'B'
SEE DETAIL 'C'
REF ITEM 109
NOTES: UNLESS OTHERWISE SPECIFIED
D
21793
404264
L

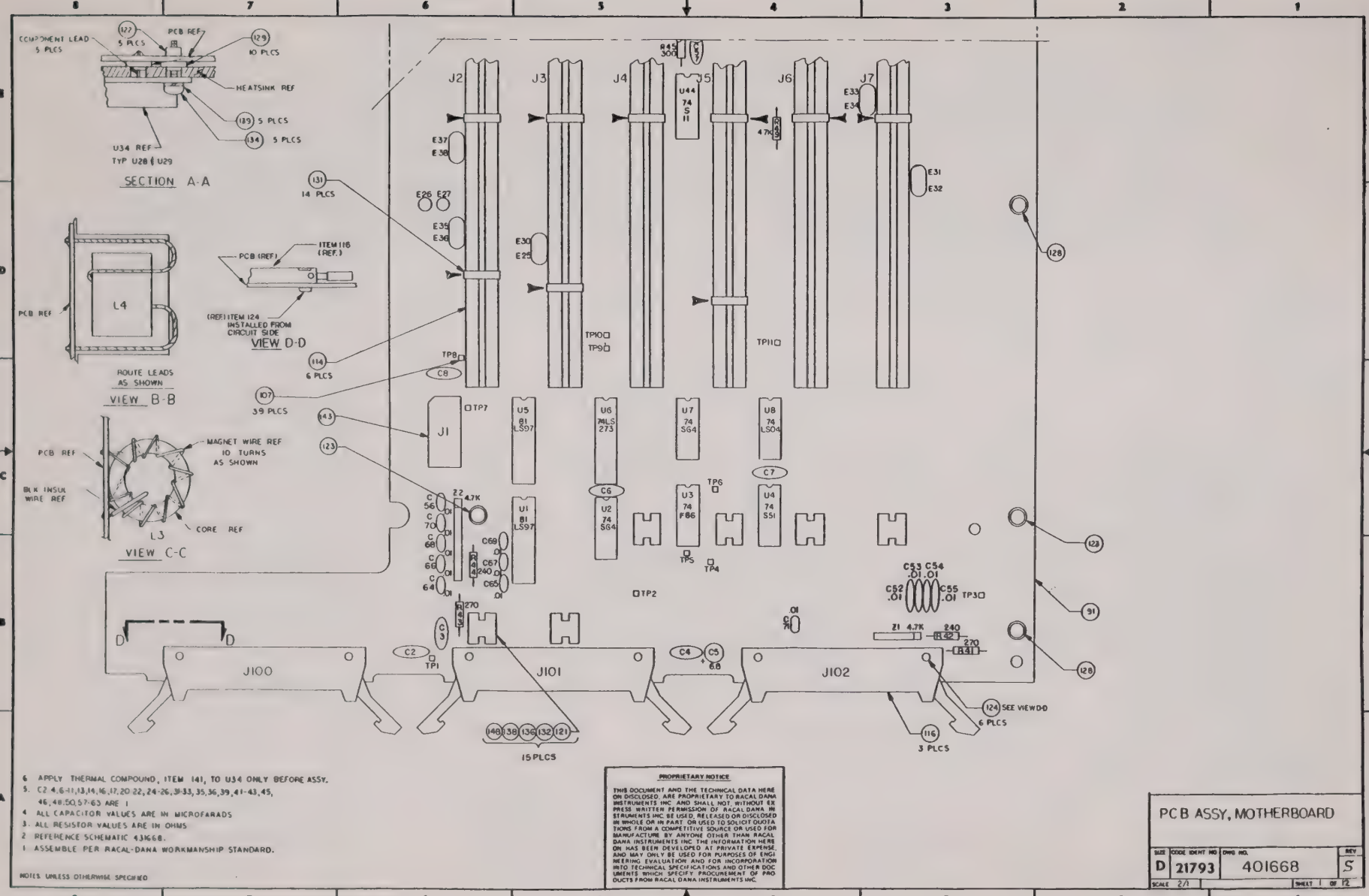

6. APPLY THERMAL COMPOUND, ITEM 141, TO U34 ONLY BEFORE ASSY.
5. C2 4,6-11,13,14,16,17,20-22,24-26,31-33,35,36,39,41-43,45, 46,48,50,57-63 ARE 1
4. ALL CAPACITOR VALUES ARE IN MICROFARADS
3. ALL RESISTOR VALUES ARE IN OHMS
2. REFERENCE SCHEMATIC 43668.
1. ASSEMBLE PER RACAL-DANA WORKMANSHIP STANDARD.

NOTES UNLESS OTHERWISE SPECIFIED

PROPRIETARY NOTICE

THIS DOCUMENT AND THE TECHNICAL DATA HERE ON DISCLOSED, ARE PROPRIETARY TO RACAL DANA INSTRUMENTS INC AND SHALL NOT, WITHOUT EX PRESS WRITTEN PERMISSION OF RACAL DANA IN STRUMENTS INC BE USED, RELEASED OR DISCLOSED IN WHOLE OR IN PART OR USED TO SOLICIT QUOTA TIONS FROM A COMPETITIVE SOURCE OR USED FOR MANUFACTURE BY ANYONE OTHER THAN RACAL DANA INSTRUMENTS INC. THE INFORMATION HERE ON HAS BEEN DEVELOPED AT PRIVATE EXPENSE, AND MAY ONLY BE USED FOR PURPOSES OF ENGI NEERING EVALUATION AND FOR INCORPORATION INTO TECHNICAL SPECIFICATIONS AND OTHER DOC UMENTS WHICH SPECIFY PROCUREMENT OF PRO DUCTS FROM RACAL DANA INSTRUMENTS INC.

PCB ASSY, MOTHERBOARD

SIZE	CODE IDENT NO	DWG NO.	REV
D	21793	401668	S

SCALE 2/1 SHEET 1 OF 12

10-1

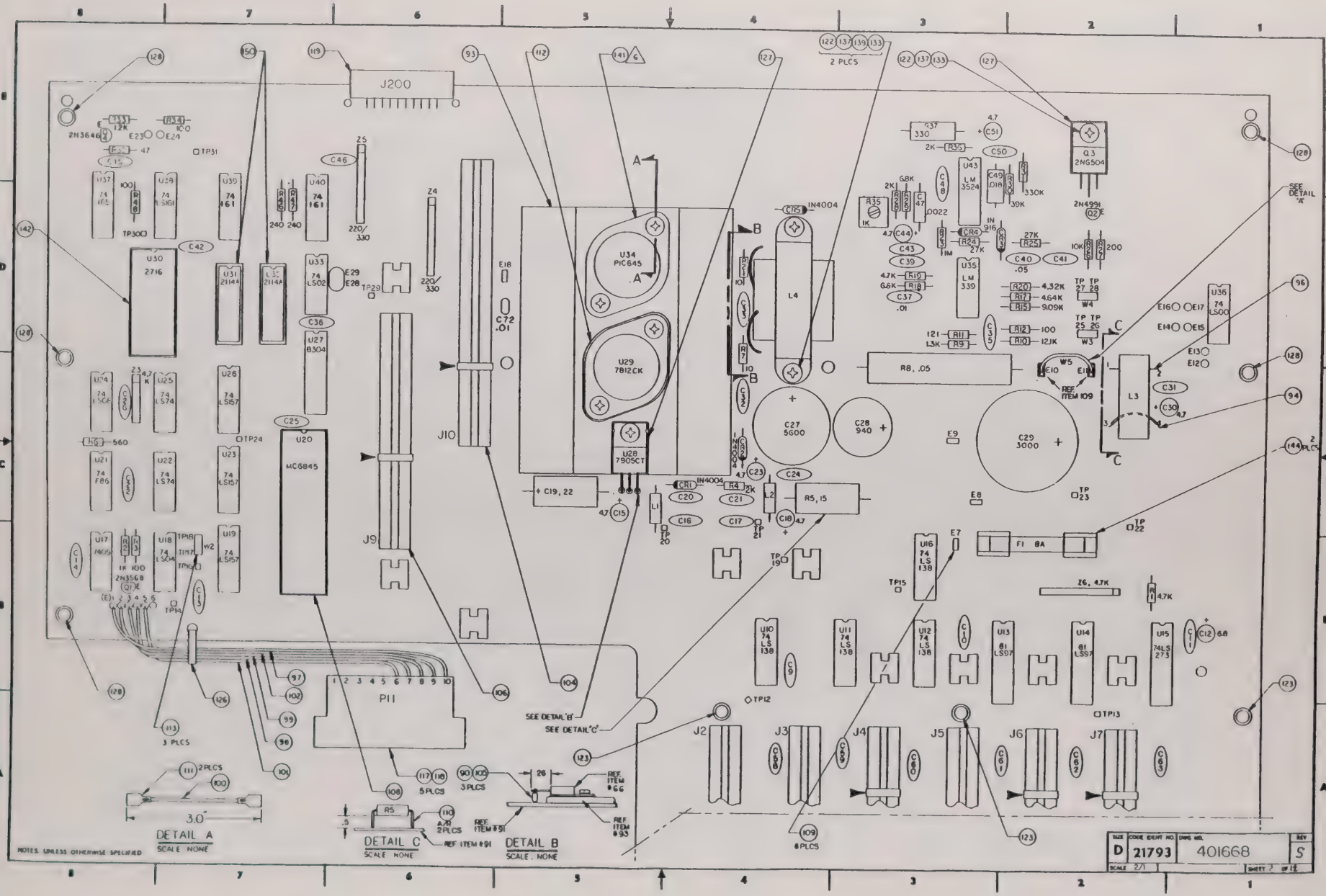
J200
U34 PIC645
U29 7812CK
U28 7905CT
U20 MC6845
U30 2716
U31 2114A
U32 2114A
U33 74 LS02
U27 8304
U36 74 LS00
Q3 2N6504
U43 LM 3524
U35 LM 339
L4
L3
C27 5600
C28 940
C29 3000
R8, .05
R5, 15
F1 8A
U16 74 LS 138
U10 74 LS 138
U11 74 LS 138
U12 74 LS 138
U13 81 LS97
U14 81 LS97
U15 74LS 273
P11
J2
J3
J4
J5
J6
J7
J9
J10
SEE DETAIL 'A'
SEE DETAIL 'B'
SEE DETAIL 'C'
DETAIL A
SCALE NONE
DETAIL C
SCALE NONE
DETAIL B
SCALE NONE
NOTES UNLESS OTHERWISE SPECIFIED
D
21793
401668
S
SCALE 2/1
SHEET 2 OF 12

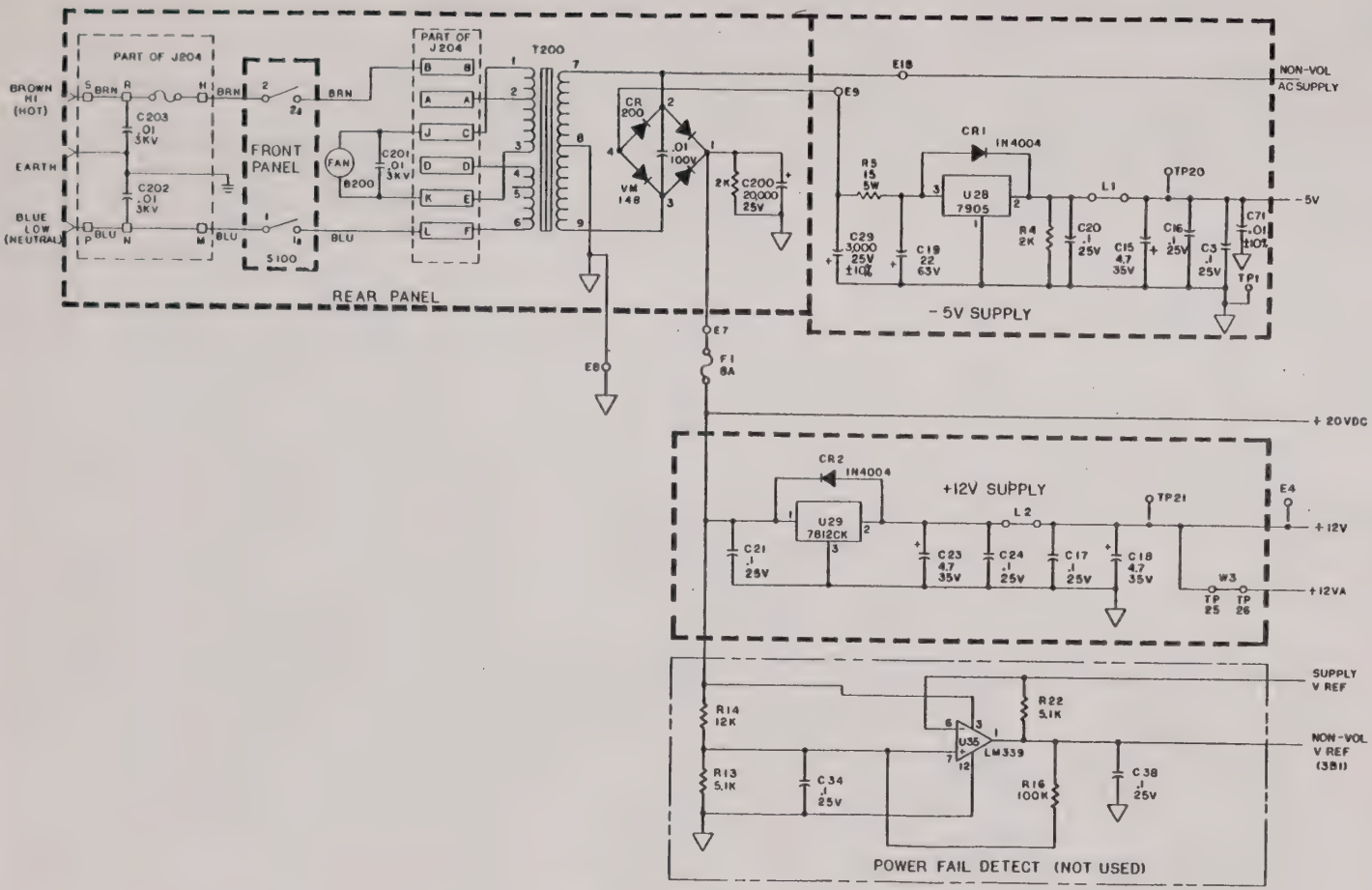

UNUSED LOGIC & NETWORKS		
DES.	TYPE	PINS
U3	74S86	4,5,6
U5	81LS97	8,9
U8	74LS04	12,8,9,10,11
U17	74LS05	12,3,4,5,6
Z3	4.7K	6
U24	74LS08	8,9,10,11,12,13
Z4	330/220	4
U44	74S11	4,2,8,9,10,11,12,13

REF. DES.	IC TYPE	+5V PIN NO.	GND PIN NO.	+20V PIN NO.	+12V PIN NO.	-5V PIN NO.
U44	74S11	14	7			
U42						
U43	LM3524	–	4,5,8,11,14	15	–	–
U41	LM2332	24	12	–	–	–
U38,39,40	74LS161	16	8			
U37	74165	16	8			
U36	74LS00	14	7			
U35	LM339	–	12	3	–	–
U34	PIC645	–	2	4	–	–
U33	74LS02	14	7			
U31,32	2114	18	9			
U30	2716	24	12			
U29	7812CK	–	3	1	2	–
U28	7905	–	1	–	–	2
U27	8304	20	10			
U24	74LS08	14	7			
U20	MC6845	20	1			
U19,23,26	74LS157	16	8			
U17	7405	14	7			
U10,11,12,16	74LS138	16	8			
U22,25	74LS74	14	7			
U8,18	74LS04	14	7			
U6,15	74LS273	20	10			
U4	74S51	14	7			
U3,21	74S86	14	7			
U2,7	74S64	14	7			
U1,5,13,14	81LS97	20	10			

IC POWER CONNECTIONS

REFERENCE DESIGNATIONS	
E38	
L4	
TP31	
U44	U9, U42
CR5	
Q4	
Z13	Z7-13
R49	R13,14,16,22,38,39,40
C72	C34,38
HIGHEST	NOT USED

PROPRIETARY NOTICE

THIS DOCUMENT AND THE TECHNICAL DATA HERE ON DISCLOSED ARE PROPRIETARY TO RACAL DANA INSTRUMENTS INC AND SHALL NOT, WITHOUT EXPRESS WRITTEN PERMISSION OF RACAL DANA INSTRUMENTS INC BE USED, RELEASED OR DISCLOSED IN WHOLE OR IN PART, OR USED TO SOLICIT QUOTATIONS FROM A COMPETITIVE SOURCE OR USED FOR MANUFACTURE BY ANYONE OTHER THAN RACAL DANA INSTRUMENTS INC. THE INFORMATION HERE ON HAS BEEN DEVELOPED AT PRIVATE EXPENSE, AND MAY ONLY BE USED FOR PURPOSES OF ENGINEERING, EVALUATION AND FOR INCORPORATION INTO TECHNICAL SPECIFICATIONS AND OTHER DOCUMENTS WHICH SPECIFY PROCUREMENT OF PRODUCTS FROM RACAL DANA INSTRUMENTS INC.

⚠ U36 NOT INSTALLED IN ASSY. 404264-(MODEL 201)

4. Z8-Z13, DO NOT INSTALL ON PCB. (SEE SHEET # 7)
3. R38, R39, AND U42, DO NOT INSTALL ON PCB. (SEE SHEET # 7)
2. CAPACITOR VALUES ARE IN MICROFARADS, ±20%, 100 VOLTS.
1. RESISTANCE VALUES ARE IN OHMS, ±5%, 1/4 WATT.

NOTES: UNLESS OTHERWISE SPECIFIED

SCHEMATIC, MOTHERBOARD

SIZE	CODE IDENT NO	DWG NO.	REV
D	21793	431668	E

SCALE | SHEET 1 OF 7

10-2

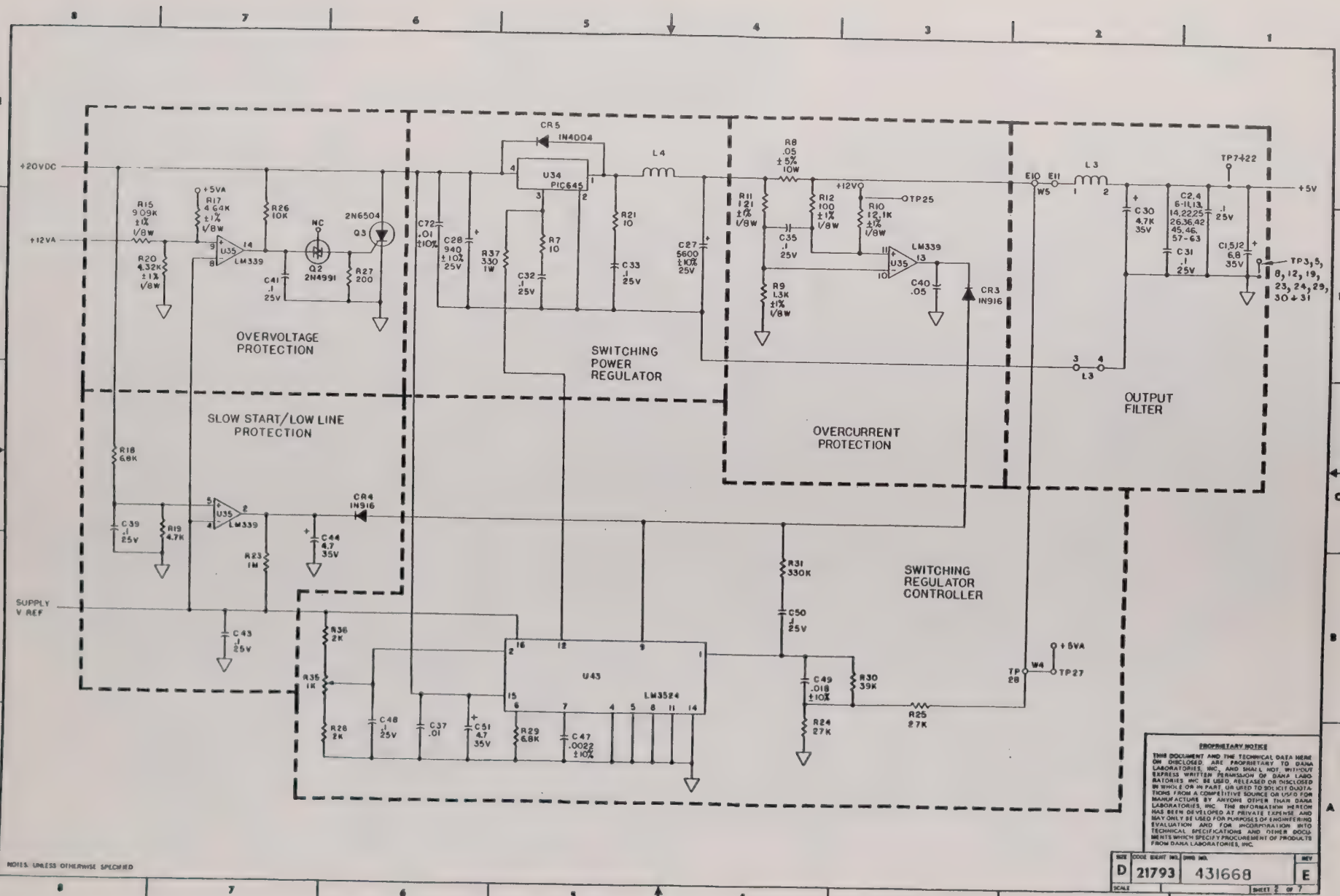

NOTES: UNLESS OTHERWISE SPECIFIED

PROPRIETARY NOTICE
THIS DOCUMENT AND THE TECHNICAL DATA HERE ON DISCLOSED, ARE PROPRIETARY TO DANA LABORATORIES, INC., AND SHALL NOT WITHOUT EXPRESS WRITTEN PERMISSION OF DANA LABORATORIES INC BE USED, RELEASED OR DISCLOSED IN WHOLE OR IN PART, OR USED TO SOLICIT QUOTATIONS FROM A COMPETITIVE SOURCE OR USED FOR MANUFACTURE BY ANYONE OTHER THAN DANA LABORATORIES, INC. THE INFORMATION HEREON HAS BEEN DEVELOPED AT PRIVATE EXPENSE AND MAY ONLY BE USED FOR PURPOSES OF ENGINEERING EVALUATION AND FOR INCORPORATION INTO TECHNICAL SPECIFICATIONS AND OTHER DOCUMENTS WHICH SPECIFY PROCUREMENT OF PRODUCTS FROM DANA LABORATORIES, INC.

SIZE	CODE IDENT NO.	DWG NO.	REV
D	21793	431668	E
SCALE		SHEET 2 OF 7	

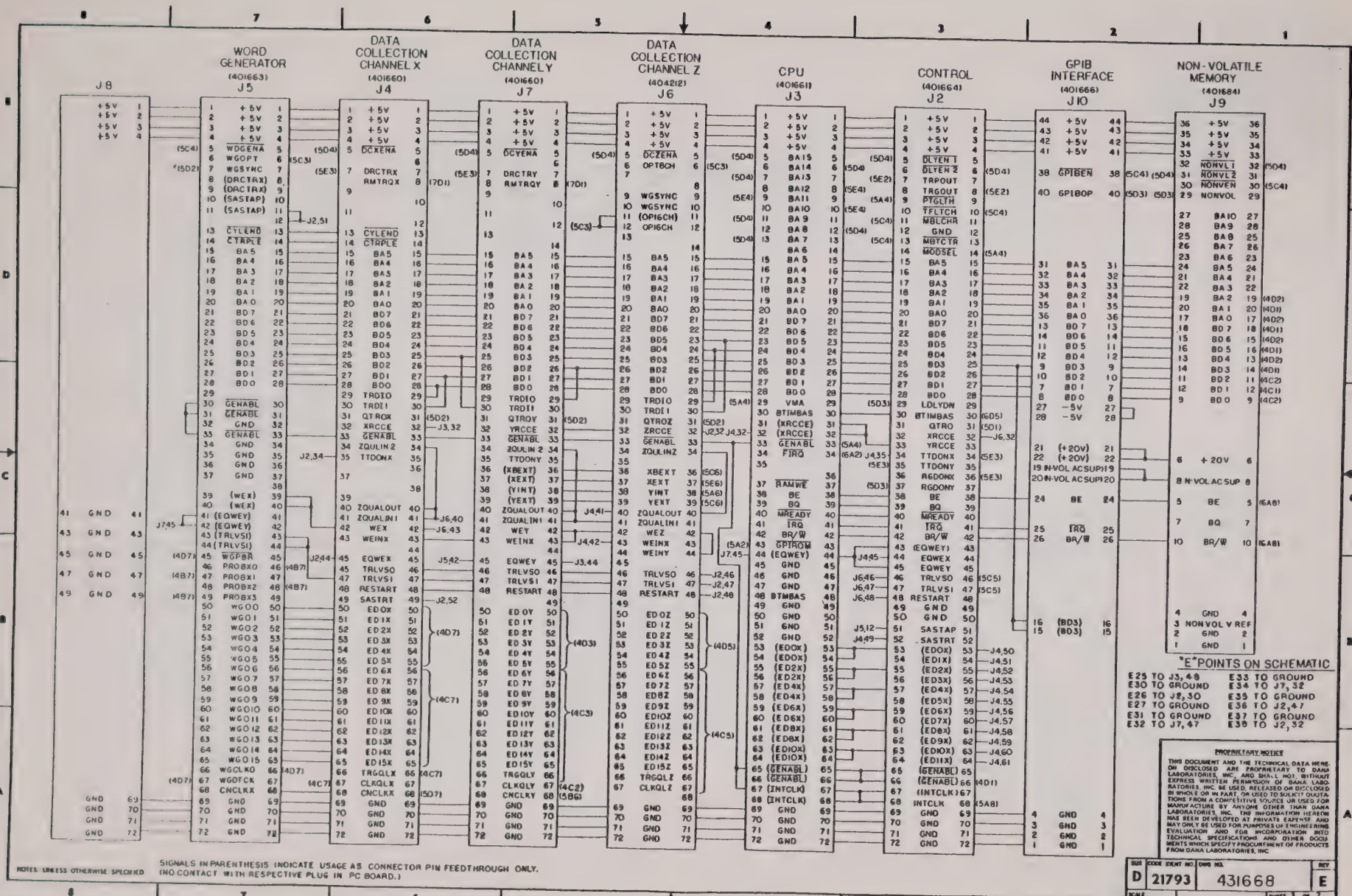

"E" POINTS ON SCHEMATIC

E25 TO J3, 48
E26 TO J2, 30
E27 TO GROUND
E31 TO GROUND
E32 TO J7, 47
E33 TO GROUND
E34 TO J7, 32
E35 TO GROUND
E36 TO J2, 47
E37 TO GROUND
E38 TO J2, 32

PROPRIETARY NOTICE

THIS DOCUMENT AND THE TECHNICAL DATA HEREIN DISCLOSED ARE PROPRIETARY TO DANA LABORATORIES, INC., AND SHALL NOT, WITHOUT EXPRESS WRITTEN PERMISSION OF DANA LABORATORIES, INC. BE USED, RELEASED OR DISCLOSED IN WHOLE OR IN PART, OR USED TO SOLICIT QUOTATIONS FROM A COMPETITIVE SOURCE OR USED FOR MANUFACTURE BY ANYONE OTHER THAN DANA LABORATORIES, INC. THE INFORMATION HEREON HAS BEEN DEVELOPED AT PRIVATE EXPENSE AND MAY ONLY BE USED FOR PURPOSES OF ENGINEERING EVALUATION AND FOR INCORPORATION INTO TECHNICAL SPECIFICATIONS AND OTHER DOCUMENTS WHICH SPECIFY PROCUREMENT OF PRODUCTS FROM DANA LABORATORIES, INC.

NOTES: UNLESS OTHERWISE SPECIFIED

SIGNALS IN PARENTHESIS INDICATE USAGE AS CONNECTOR PIN FEEDTHROUGH ONLY. (NO CONTACT WITH RESPECTIVE PLUG IN PC BOARD.)

SIZE	CODE IDENT NO.	DWG NO.	REV
D	21793	431668	E
SCALE		SHEET 3 OF 7	

10-23

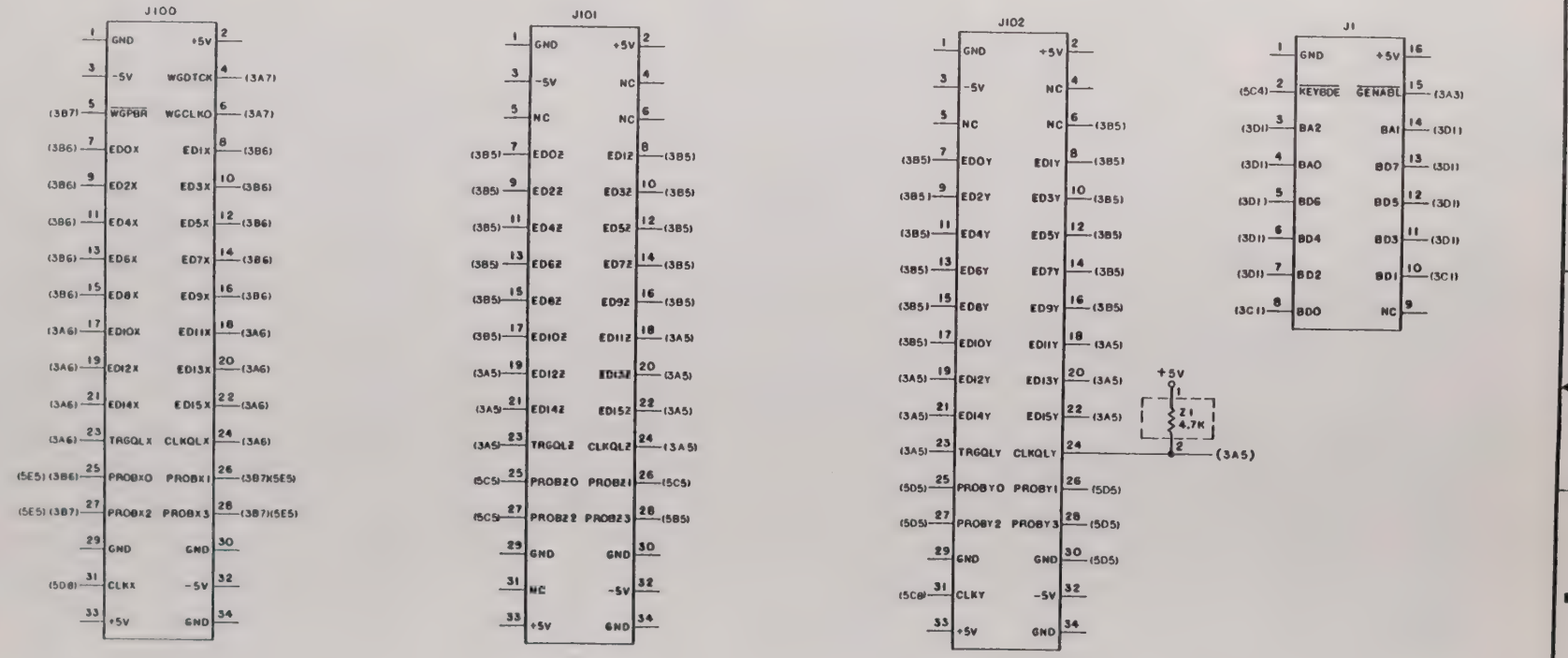

PROPRIETARY NOTICE

THIS DOCUMENT AND THE TECHNICAL DATA HERE ON DISCLOSED, ARE PROPRIETARY TO DANA LABORATORIES, INC., AND SHALL NOT, WITHOUT EXPRESS WRITTEN PERMISSION OF DANA LABORATORIES INC BE USED, RELEASED OR DISCLOSED IN WHOLE OR IN PART OR USED TO SOLICIT QUOTATIONS FROM A COMPETITIVE SOURCE OR USED FOR MANUFACTURE BY ANYONE OTHER THAN DANA LABORATORIES, INC. THE INFORMATION HEREIN HAS BEEN DEVELOPED AT PRIVATE EXPENSE, AND MAY ONLY BE USED FOR PURPOSES OF ENGINEERING EVALUATION AND FOR INCORPORATION INTO TECHNICAL SPECIFICATIONS AND OTHER DOCUMENTS WHICH SPECIFY PROCUREMENT OF PRODUCTS FROM DANA LABORATORIES, INC.

NOTES: UNLESS OTHERWISE SPECIFIED

SIZE	CODE IDENT NO.	DWG NO.	REV
D	21793	431668	E

SCALE NONE SHEET 4 OF 7

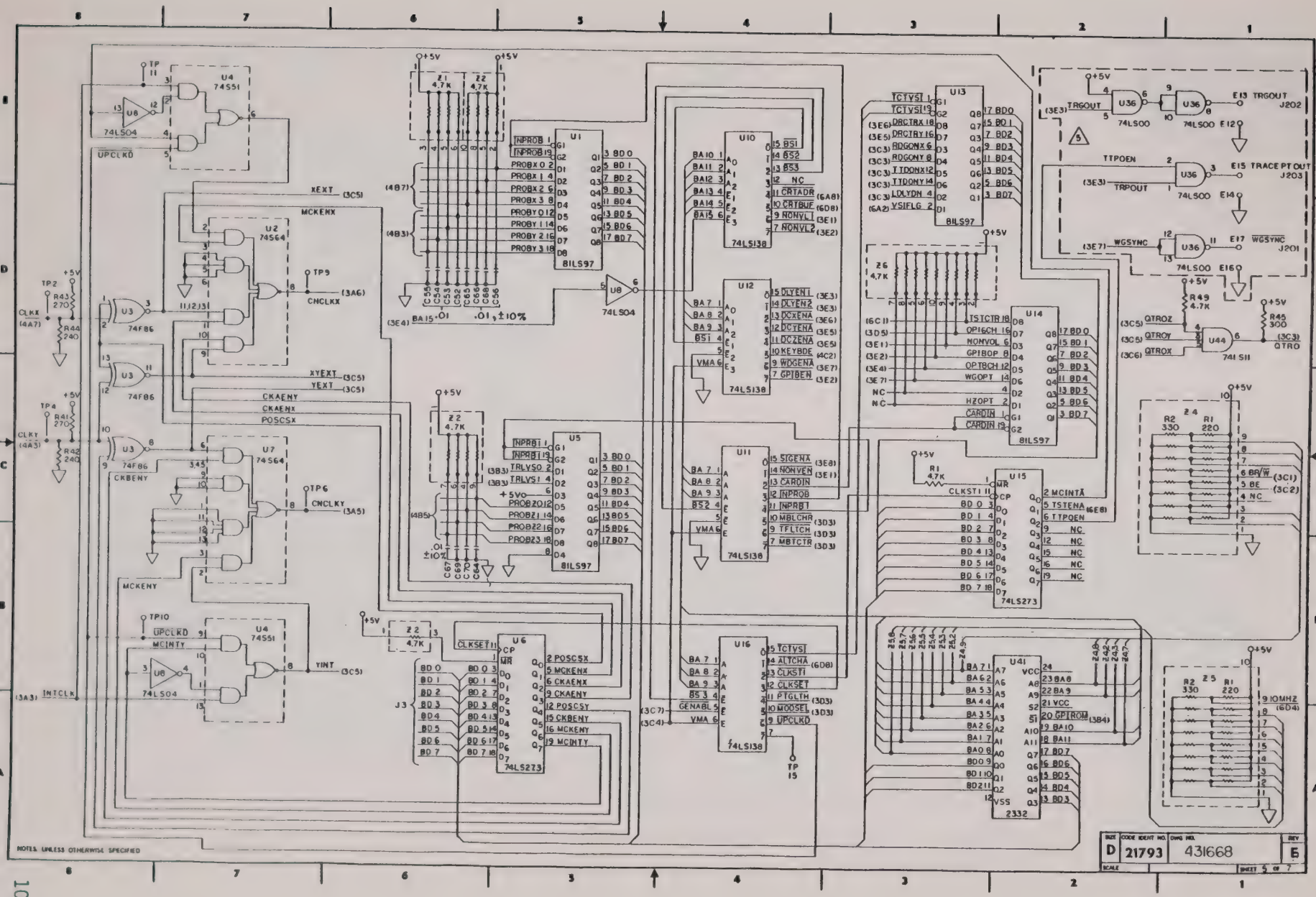
NOTES: UNLESS OTHERWISE SPECIFIED
SIZE D
CODE IDENT NO. 21793
DWG NO. 431668
REV E
SCALE
SHEET 5 OF 7

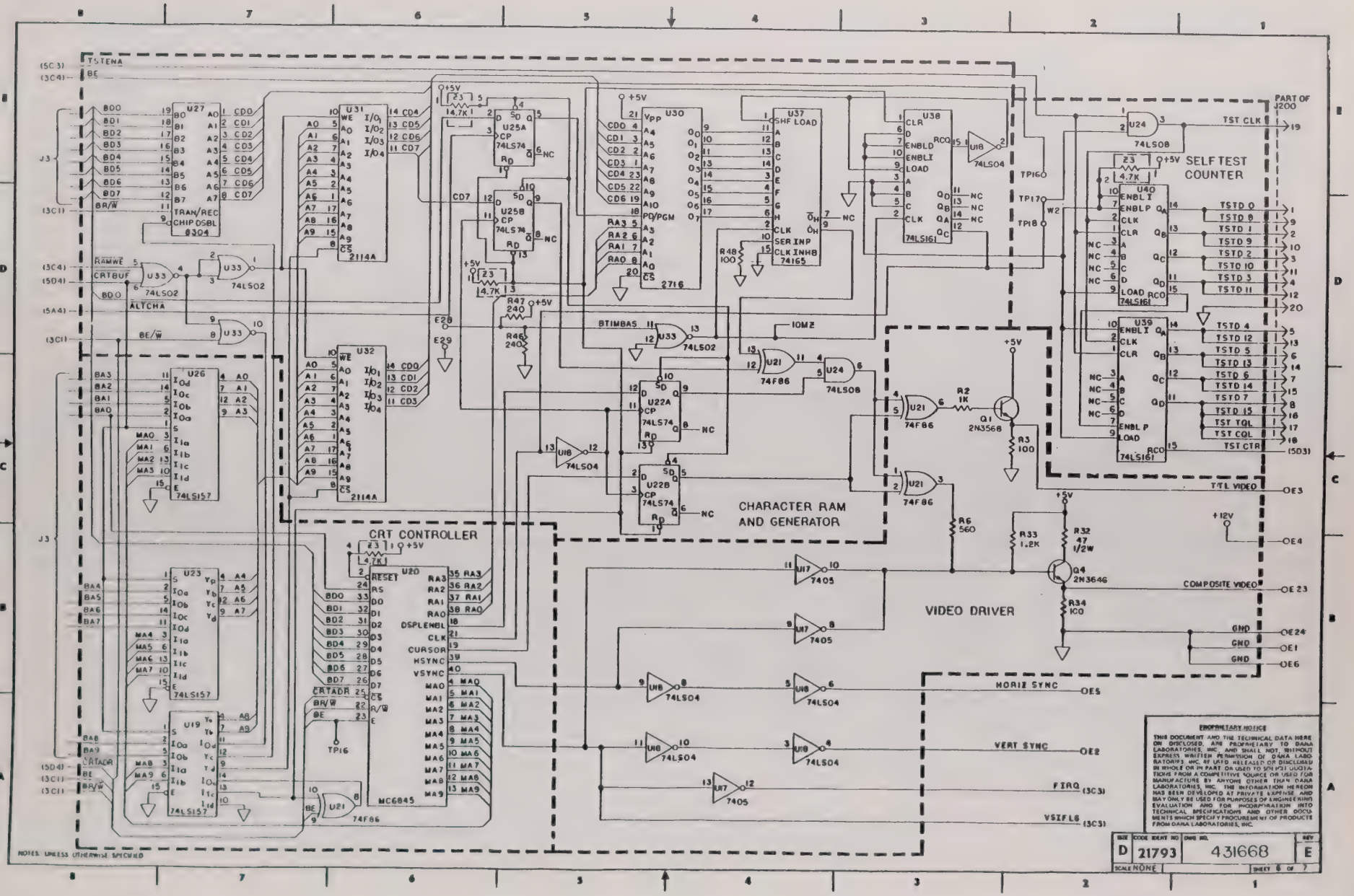
SELF TEST COUNTER
CHARACTER RAM AND GENERATOR
CRT CONTROLLER
VIDEO DRIVER
PART OF J200
TST CLK
TSTD 0
TSTD 8
TSTD 1
TSTD 9
TSTD 2
TSTD 10
TSTD 3
TSTD 11
TSTD 4
TSTD 12
TSTD 5
TSTD 13
TSTD 6
TSTD 14
TSTD 7
TSTD 15
TST TQL
TST CQL
TST CTR
TTL VIDEO
COMPOSITE VIDEO
GND
HORIZ SYNC
VERT SYNC
FIRQ
VSIFLG
TSTENA
BE
RAMWE
CRTBUF
ALTCHA
BE/W
CRTADR
BTIMBAS
10MZ
TP16
TP17
TP18
W2
+5V
+12V
U27 8304 TRAN/REC CHIP DSBL
U31 2114A
U32 2114A
U25A 74LS74
U25B 74LS74
U30 2716
U37 74165 SHF LOAD
U38 74LS161
U40 74LS161
U39 74LS161
U26 74LS157
U23 74LS157
U19 74LS157
U20 MC6845
U22A 74LS74
U22B 74LS74
U33 74LS02
U21 74F86
U24 74LS08
U18 74LS04
U17 7405
Q1 2N3568
Q4 2N3646
R2 1K
R3 100
R6 560
R33 1.2K
R32 47 1/2W
R34 100
R48 100
R47 240
R46 240
NOTES: UNLESS OTHERWISE SPECIFIED
PROPRIETARY NOTICE
THIS DOCUMENT AND THE TECHNICAL DATA HERE ON DISCLOSED, ARE PROPRIETARY TO DANA LABORATORIES, INC. AND SHALL NOT, WITHOUT EXPRESS WRITTEN PERMISSION OF DANA LABORATORIES, INC. BE USED, RELEASED OR DISCLOSED IN WHOLE OR IN PART OR USED TO SOLICIT QUOTATIONS FROM A COMPETITIVE SOURCE OR USED FOR MANUFACTURE BY ANYONE OTHER THAN DANA LABORATORIES, INC. THE INFORMATION HEREON HAS BEEN DEVELOPED AT PRIVATE EXPENSE AND MAY ONLY BE USED FOR PURPOSES OF ENGINEERING EVALUATION AND FOR INCORPORATION INTO TECHNICAL SPECIFICATIONS AND OTHER DOCUMENTS WHICH SPECIFY PROCUREMENT OF PRODUCTS FROM DANA LABORATORIES, INC.
SIZE D
CODE IDENT NO 21793
DWG NO. 431668
REV E
SCALE NONE
SHEET 6 OF 7

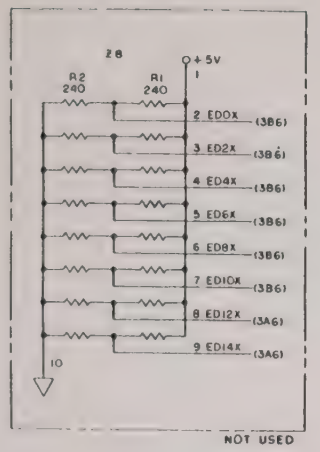

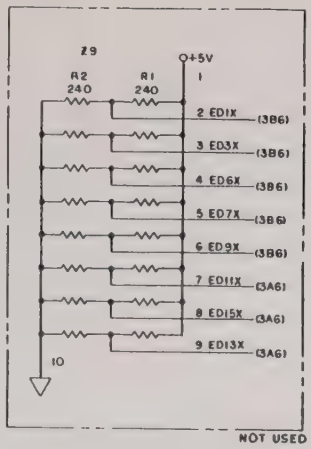

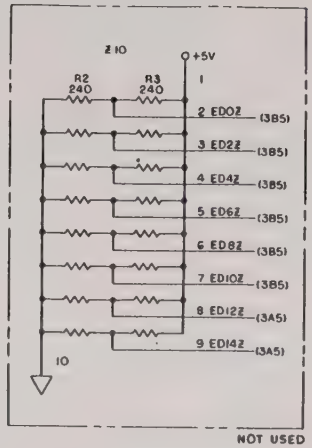

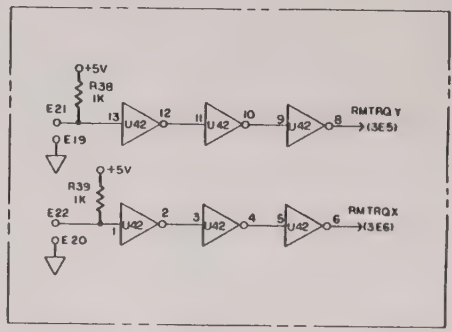

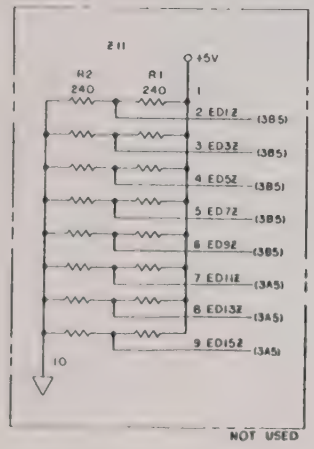

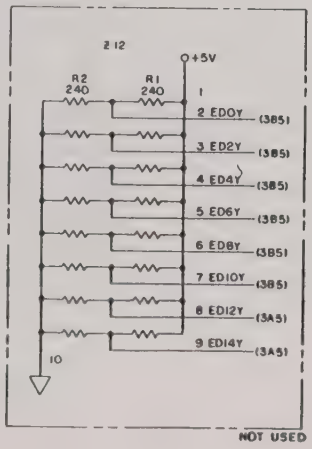

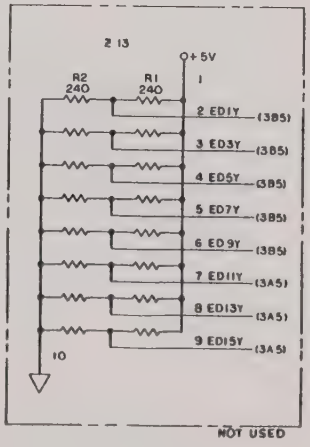

PROPRIETARY NOTICE
THIS DOCUMENT AND THE TECHNICAL DATA HEREON DISCLOSED, ARE PROPRIETARY TO DANA LABORATORIES, INC., AND SHALL NOT WITHOUT EXPRESS WRITTEN PERMISSION OF DANA LABORATORIES INC. BE USED RELEASED OR DISCLOSED IN WHOLE OR IN PART, OR USED TO SOLICIT QUOTATIONS FROM A COMPETITIVE SOURCE OR USED FOR MANUFACTURE BY ANYONE OTHER THAN DANA LABORATORIES, INC. THE INFORMATION HEREON HAS BEEN DEVELOPED AT PRIVATE EXPENSE, AND MAY ONLY BE USED FOR PURPOSES OF ENGINEERING EVALUATION AND FOR INCORPORATION INTO TECHNICAL SPECIFICATIONS AND OTHER DOCUMENTS WHICH SPECIFY PROCUREMENT OF PRODUCTS FROM DANA LABORATORIES, INC.

NOTES: UNLESS OTHERWISE SPECIFIED

SIZE	CODE IDENT NO.	DWG NO.	REV
D	21793	431668	E
SCALE		SHEET 7 OF 7	

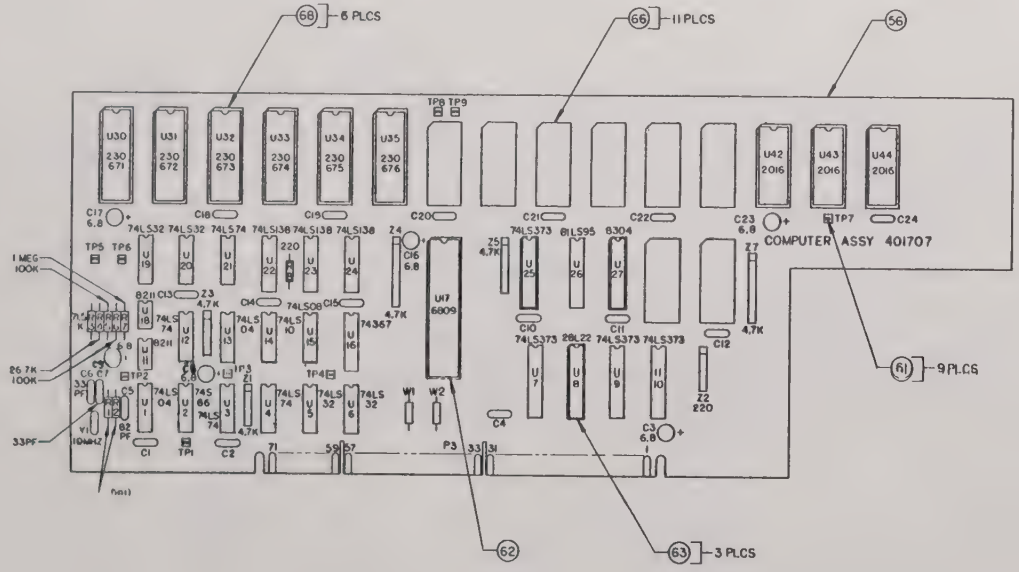

4 ALL CAPACITORS ARE IN MICROFARADS.
3 ALL RESISTORS ARE IN OHMS.
2 REFERENCE SCHEMATIC NO. 431707.
1 ASSEMBLY PROCESSES AND PROCEDURES TO CONFORM TO RACAL-DANA WORKMANSHIP STANDARDS.
NOTES: UNLESS OTHERWISE SPECIFIED

PROPRIETARY NOTICE

THIS DOCUMENT AND THE TECHNICAL DATA HERE ON DISCLOSED ARE PROPRIETARY TO RACAL DANA INSTRUMENTS INC. AND SHALL NOT WITHOUT EX PRESS WRITTEN PERMISSION OF RACAL DANA IN STRUMENTS INC BE USED REVEALED OR DISCLOSED IN WHOLE OR IN PART OR USED TO VERIFY DATA THAT FROM A COMPETITIVE SOURCE OR USED FOR MANUFACTURE BY ANYONE OTHER THAN RACAL DANA INSTRUMENTS INC THE INFORMATION HERE ON HAS BEEN DEVELOPED AT PRIVATE EXPENSE AND MAY ONLY BE USED FOR PURPOSES OF ENGI NEERING EVALUATION AND FOR INCORPORATION INTO TECHNICAL SPECIFICATIONS AND OTHER DOC UMENTS WHICH SPECIFY PROCUREMENT OF PRO DUCTS FROM RACAL DANA INSTRUMENTS INC

PCB ASSY, COMPUTER

SIZE	CODE IDENT NO	DWG NO	REV
D	21793	401707	A

SCALE NONE SHEET 1 OF 5

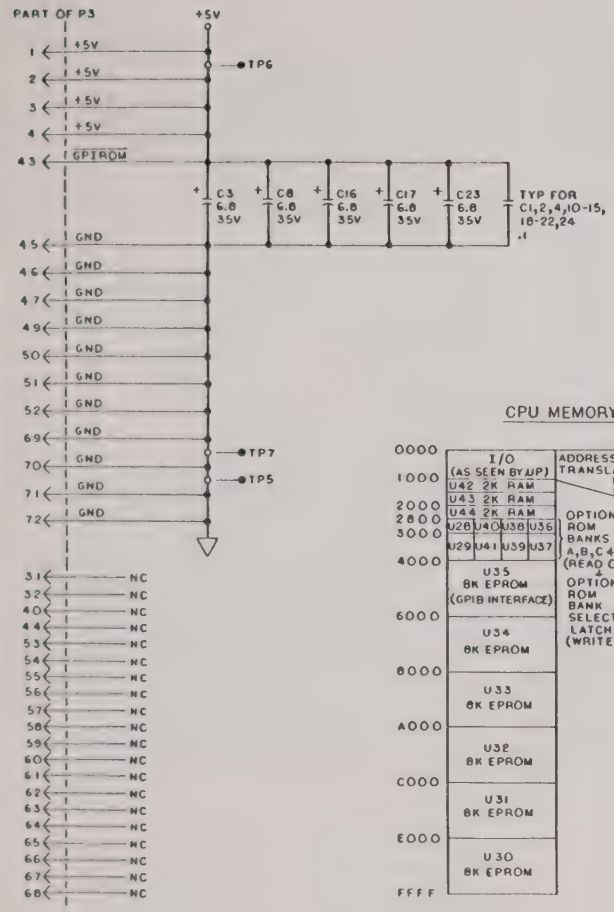

CPU MEMORY MAP

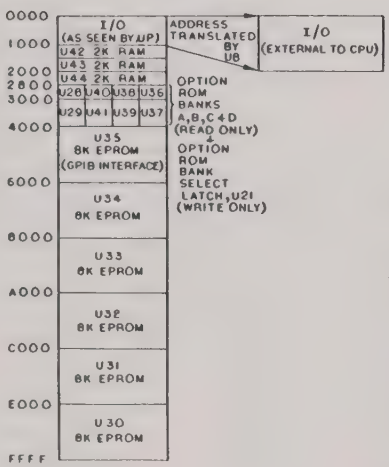

INPUTS GROUNDED ON ALL UNUSED LOGIC

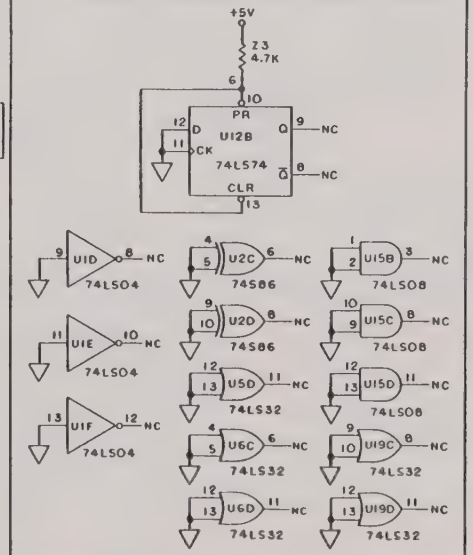

Z7	
Y1	
W3	
U44	
TP9	
R8	
P3	
C24	
HIGHEST	NOT USED

REFERENCE DESIGNATION

Z7	4.7K	2
Z6	4.7K	10
Z5	4.7K	3
Z2	220	6
Z1	4.7K	4
REF DES	TYPE	PINS

UNUSED LOGIC & NETWORKS

U42,43,44	2016	24	12
U30,31,32	2764	28	14
U33,34,35			
U29,37,39	2532	24	12
U41			
U28,36,38	2716	24	12
U40			
U27	8304	20	10
U26	BILS95	20	10
U22,23,24	74LS138	16	8
U17	6809	7	1
U16	74367	16	8
U15	74LS08	14	7
U14	74LS10	14	7
U11,18	8211	8	5
U8	28L22	20	10
U7,9,10, U25	74LS373	20	10
U5,6,19, U20	74LS32	14	7
U3,4,12 U21	74LS74	14	7
U2	74S86	14	7
U1,13	74LS04	14	7
REF DES	IC TYPE	+5V PIN NO	GND PIN NO

IC POWER CONNECTIONS

PROPRIETARY NOTICE

THIS DOCUMENT AND THE TECHNICAL DATA HERE ON DISCLOSED ARE PROPRIETARY TO RACAL DANA INSTRUMENTS INC AND SHALL NOT WITHOUT EX PRESS WRITTEN PERMISSION OF RACAL DANA IN STRUMENTS INC BE USED RELEASED OR DISCLOSED IN WHOLE OR IN PART OR USED TO SOLICIT QUOTA TIONS FROM A COMPETITIVE SOURCE OR USED FOR MANUFACTURE BY ANYONE OTHER THAN RACAL DANA INSTRUMENTS INC THE INFORMATION HERE ON HAS BEEN DEVELOPED AT PRIVATE EXPENSE AND MAY ONLY BE USED FOR PURPOSES OF ENGI NEERING EVALUATION AND FOR INCORPORATION INTO TECHNICAL SPECIFICATIONS AND OTHER DOC UMENTS WHICH SPECIFY PROCUREMENT OF PRO DUCTS FROM RACAL DANA INSTRUMENTS INC

NOTES UNLESS OTHERWISE SPECIFIED

1. RESISTOR VALUES ARE IN OHMS, ±5%, 1/4 WATT.
2. CAPACITOR VALUES ARE IN MICROFARADS, ±20%, 25 VOLTS.
3. ALL RESISTOR NETWORKS ±2%.

4 Z6 IS NOT INSTALLED.

SCHEMATIC, CPU

SIZE	CODE IDENT NO	DWG NO	REV
D	21793	431707	A

SCALE NONE SHEET 1 OF 5

10-29

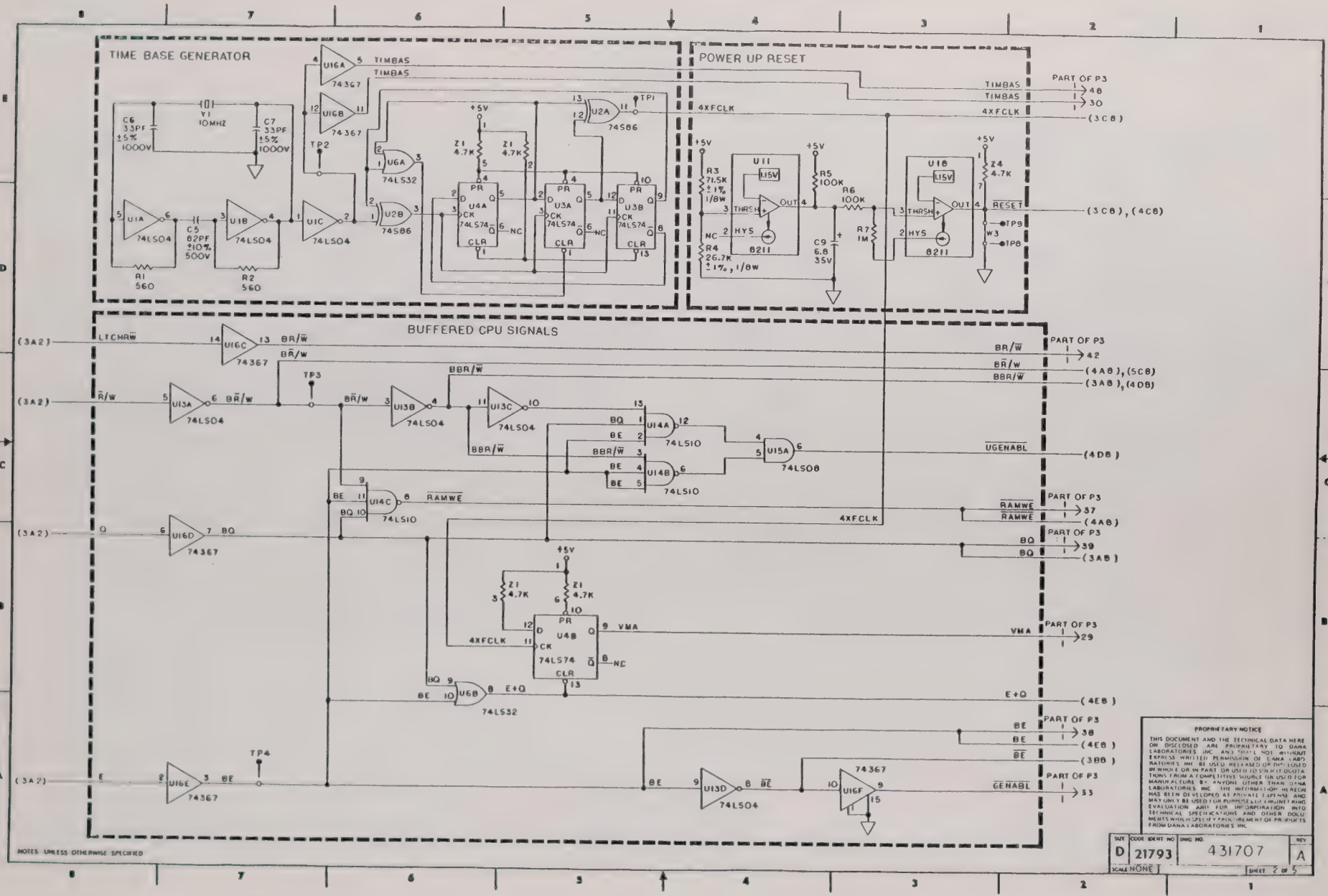
TIME BASE GENERATOR
POWER UP RESET
BUFFERED CPU SIGNALS
Y1 10MHZ
C6 33PF ±5% 1000V
C7 33PF ±5% 1000V
C5 82PF ±10% 500V
R1 560
R2 560
74LS04
74367
74LS32
74S86
74LS74
74LS10
74LS08
TIMBAS
4XFCLK
TP1
TP2
TP3
TP4
R3 71.5K ±1% 1/8W
R4 26.7K ±1%, 1/8W
R5 100K
R6 100K
R7 1M
C9 6.8 35V
8211
RESET
TP9
TP8
W3
LTCHR/W
R/W
BR/W
BBR/W
BE
BQ
RAMWE
UGENABL
VMA
E+Q
GENABL
PART OF P3
(3A2)
(3C8), (4C8)
(4A8), (5C8)
(3A8), (4D8)
(4D8)
(4A8)
(3A8)
(4E8)
(3B8)
NOTES UNLESS OTHERWISE SPECIFIED
PROPRIETARY NOTICE
SIZE D
CODE IDENT NO 21793
DWG NO 431707
REV A
SCALE NONE
SHEET 2 OF 5

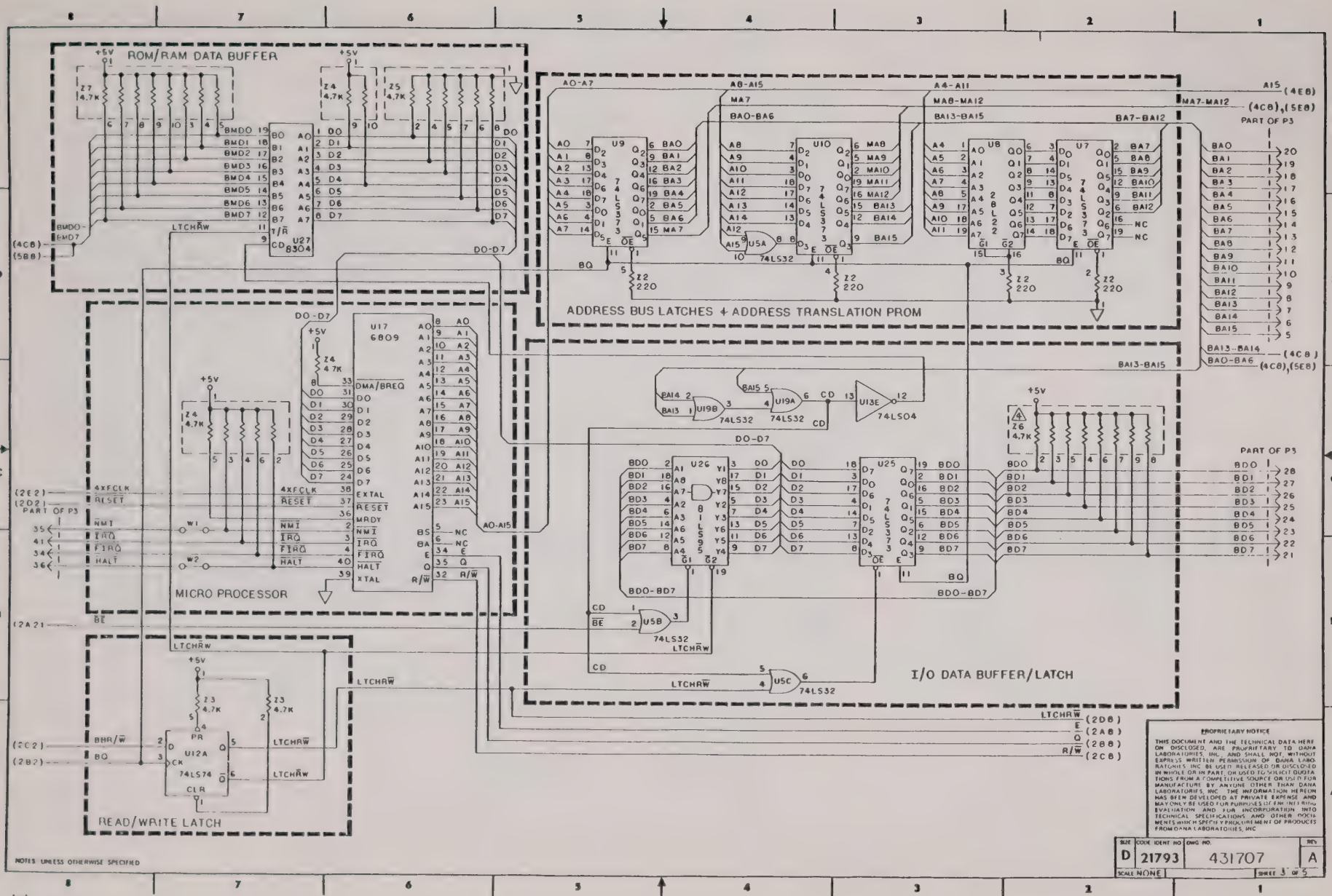
ROM/RAM DATA BUFFER
ADDRESS BUS LATCHES & ADDRESS TRANSLATION PROM
MICRO PROCESSOR
I/O DATA BUFFER/LATCH
READ/WRITE LATCH
PROPRIETARY NOTICE
THIS DOCUMENT AND THE TECHNICAL DATA HERE ON DISCLOSED, ARE PROPRIETARY TO DANA LABORATORIES, INC. AND SHALL NOT, WITHOUT EXPRESS WRITTEN PERMISSION OF DANA LABORATORIES INC BE USED, RELEASED OR DISCLOSED IN WHOLE OR IN PART, OR USED TO SOLICIT QUOTATIONS FROM A COMPETITIVE SOURCE OR USED FOR MANUFACTURE BY ANYONE OTHER THAN DANA LABORATORIES, INC. THE INFORMATION HEREON HAS BEEN DEVELOPED AT PRIVATE EXPENSE AND MAY ONLY BE USED FOR PURPOSES OF EVALUATION AND FOR INCORPORATION INTO TECHNICAL SPECIFICATIONS AND OTHER DOCUMENTS WHICH SPECIFY PROCUREMENT OF PRODUCTS FROM DANA LABORATORIES, INC
SIZE D
CODE IDENT NO 21793
DWG NO. 431707
REV A
SCALE NONE
SHEET 3 OF 5
NOTES UNLESS OTHERWISE SPECIFIED

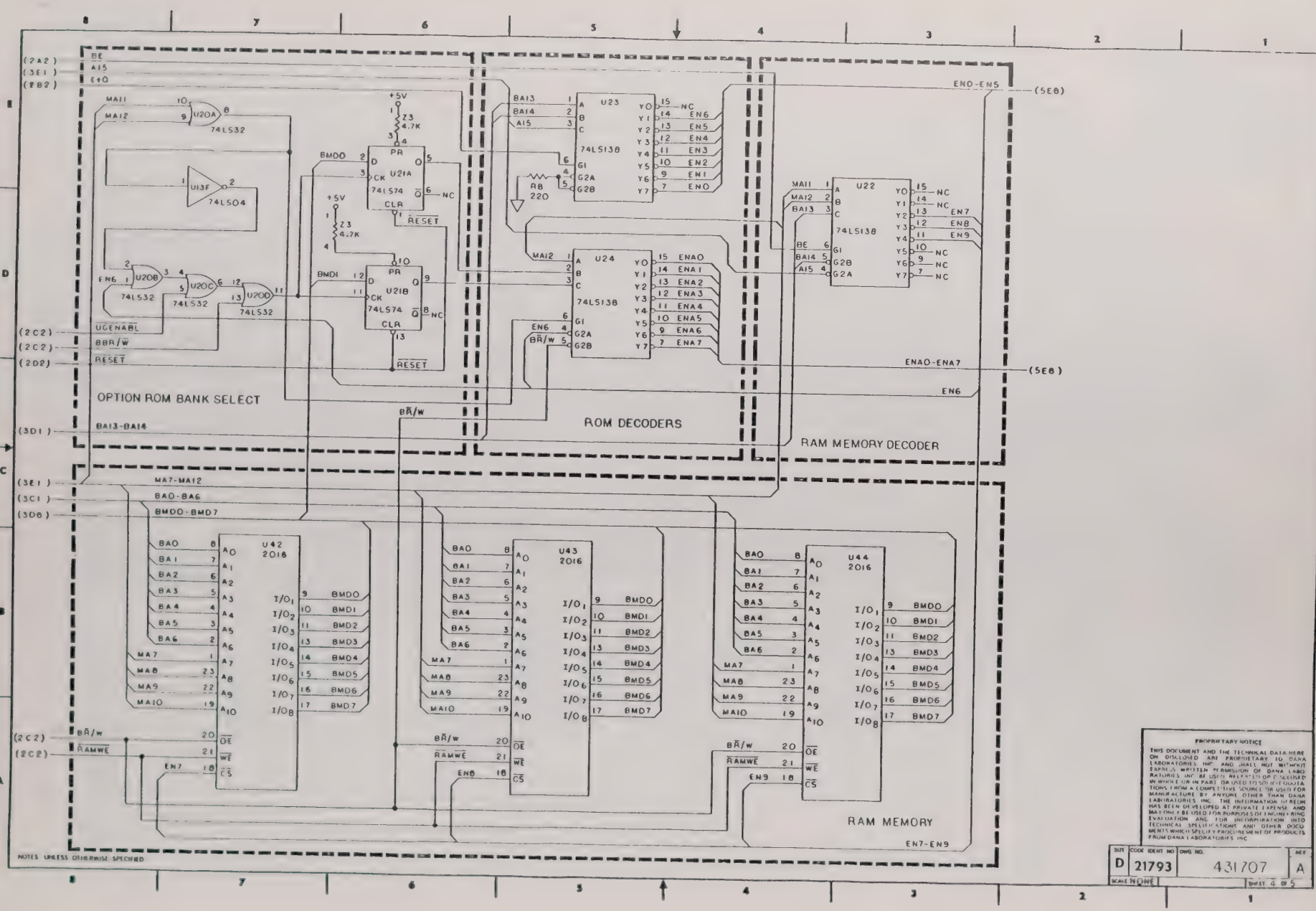

PROPRIETARY NOTICE
THIS DOCUMENT AND THE TECHNICAL DATA HERE ON DISCLOSED ARE PROPRIETARY TO DANA LABORATORIES INC. AND SHALL NOT WITHOUT EXPRESS WRITTEN PERMISSION OF DANA LABORATORIES INC BE USED, REPRODUCED OR DISCLOSED IN WHOLE OR IN PART OR USED TO SOLICIT QUOTATIONS FROM A COMPETITIVE SOURCE OR USED FOR MANUFACTURE BY ANYONE OTHER THAN DANA LABORATORIES INC. THE INFORMATION HEREIN HAS BEEN DEVELOPED AT PRIVATE EXPENSE AND MAY ONLY BE USED FOR PURPOSES OF ENGINEERING EVALUATION AND FOR INCORPORATION INTO TECHNICAL SPECIFICATIONS AND OTHER DOCUMENTS WHICH SPECIFY PROCUREMENT OF PRODUCTS FROM DANA LABORATORIES INC.

SIZE	CODE IDENT NO	DWG NO.	REV
D	21793	431707	A

SCALE NONE SHEET 4 OF 5

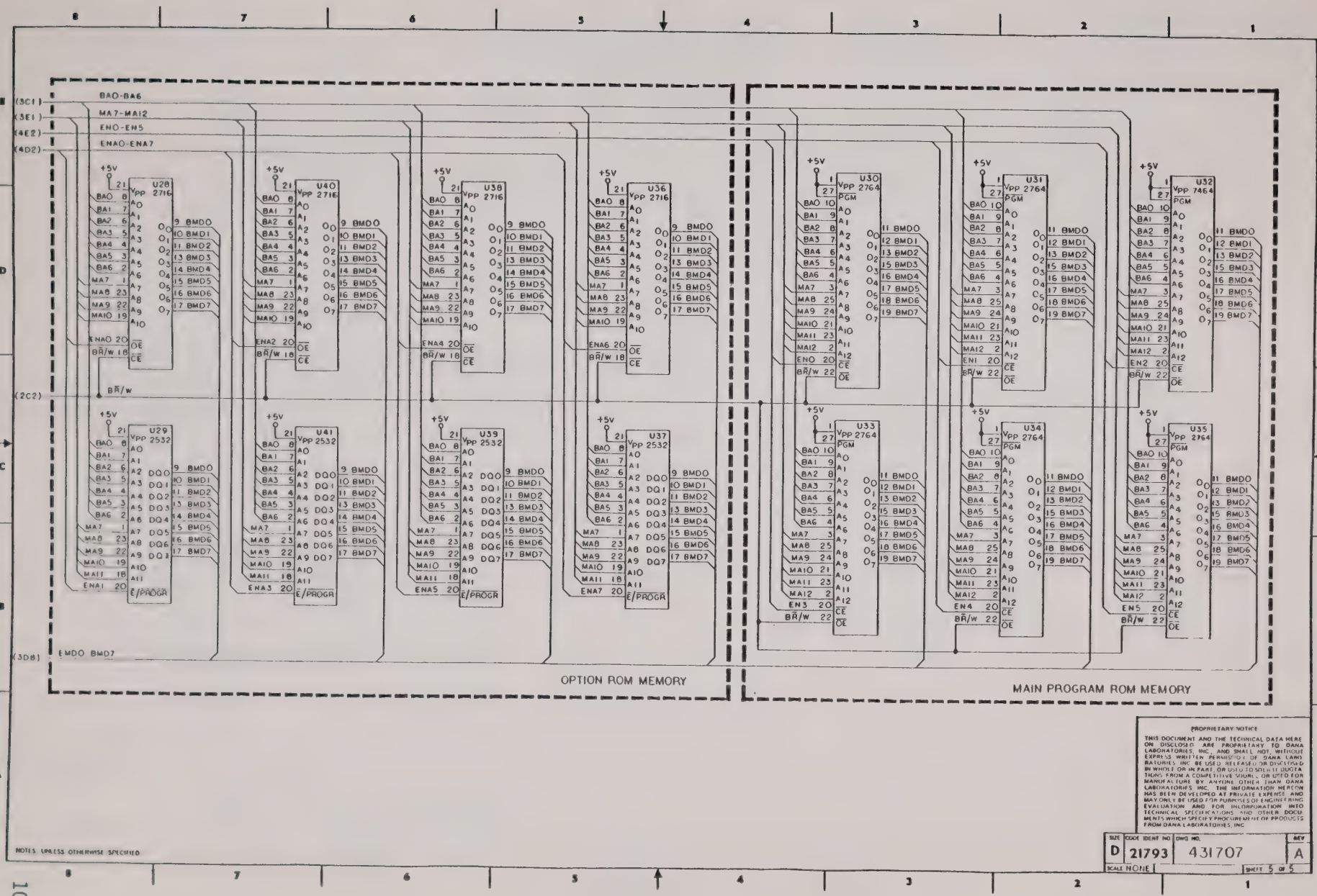

NOTES: UNLESS OTHERWISE SPECIFIED

PROPRIETARY NOTICE

THIS DOCUMENT AND THE TECHNICAL DATA HERE ON DISCLOSED ARE PROPRIETARY TO DANA LABORATORIES, INC., AND SHALL NOT, WITHOUT EXPRESS WRITTEN PERMISSION OF DANA LABORATORIES INC. BE USED, RELEASED OR DISCLOSED IN WHOLE OR IN PART, OR USED TO SOLICIT QUOTATIONS FROM A COMPETITIVE SOURCE, OR USED FOR MANUFACTURE BY ANYONE OTHER THAN DANA LABORATORIES INC. THE INFORMATION HEREON HAS BEEN DEVELOPED AT PRIVATE EXPENSE AND MAY ONLY BE USED FOR PURPOSES OF ENGINEERING EVALUATION AND FOR INCORPORATION INTO TECHNICAL SPECIFICATIONS AND OTHER DOCUMENTS WHICH SPECIFY PROCUREMENT OF PRODUCTS FROM DANA LABORATORIES, INC.

SIZE	CODE IDENT NO	DWG NO.	REV
D	21793	431707	A

SCALE NONE | SHEET 5 OF 5

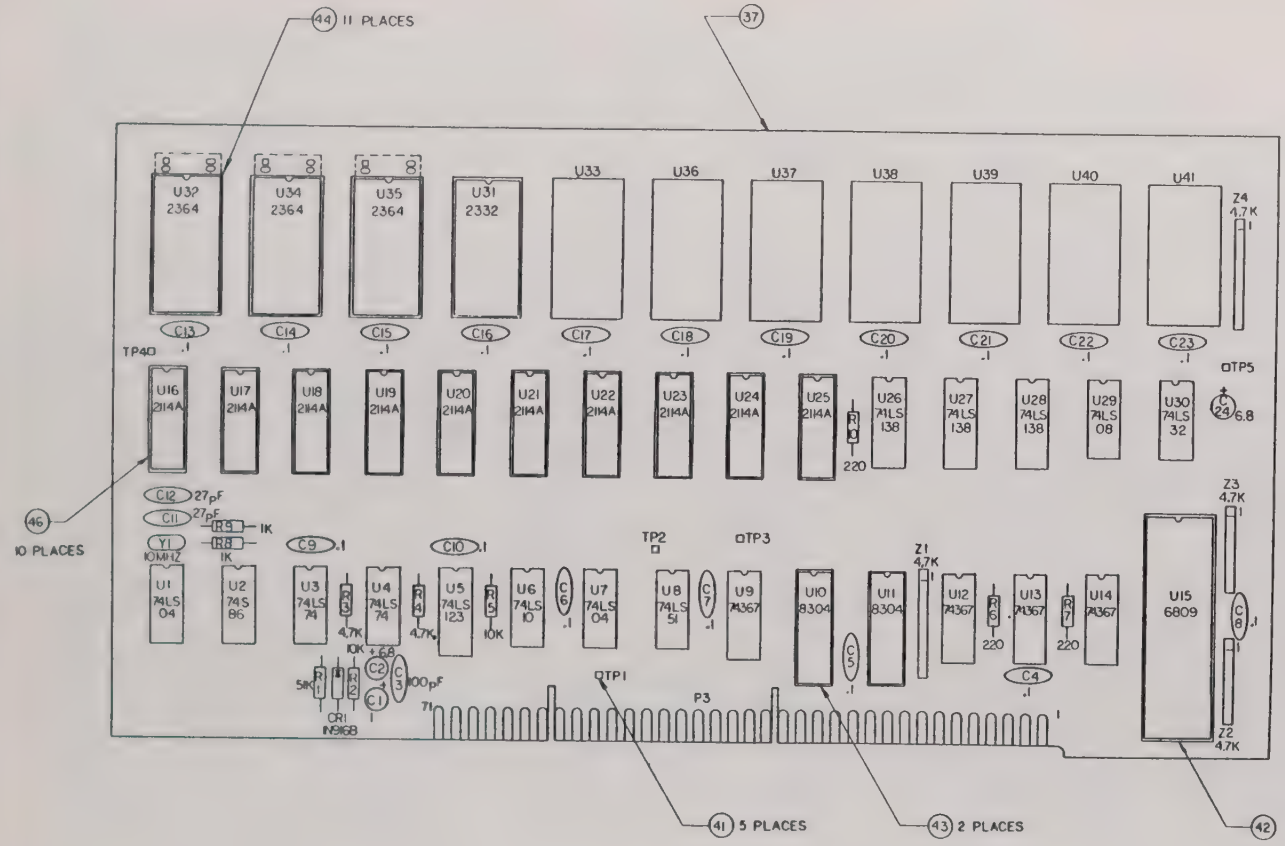

4. CAPACITORS ARE IN UF.
3. RESISTORS ARE IN OHMS.
2. REFERENCE SCHEMATIC NO. 431661.
1. ASSEMBLY PROCESSES & PROCEDURES TO CONFORM TO RACAL-DANA WORKMANSHIP STANDARD.

NOTES: UNLESS OTHERWISE SPECIFIED

PROPRIETARY NOTICE

THIS DOCUMENT AND THE TECHNICAL DATA HEREIN DISCLOSED ARE PROPRIETARY TO RACAL DANA INSTRUMENTS INC AND SHALL NOT WITHOUT EXPRESS WRITTEN PERMISSION OF RACAL DANA INSTRUMENTS INC BE USED RELEASED OR DISCLOSED IN WHOLE OR IN PART OR USED TO SOLICIT QUOTATIONS FROM A COMPETITIVE SOURCE OR USED FOR MANUFACTURE BY ANYONE OTHER THAN RACAL DANA INSTRUMENTS INC THE INFORMATION HEREIN HAS BEEN DEVELOPED AT PRIVATE EXPENSE AND MAY ONLY BE USED FOR PURPOSES OF ENGINEERING EVALUATION AND FOR INCORPORATION INTO TECHNICAL SPECIFICATIONS AND OTHER DOCUMENTS WHICH SPECIFY PROCUREMENT OF PRODUCTS FROM RACAL DANA INSTRUMENTS INC

PCB ASS'Y, CPU

SIZE	CODE IDENT NO	DWG NO	REV
D	21793	401661	C

SCALE 2/1 SHEET OF

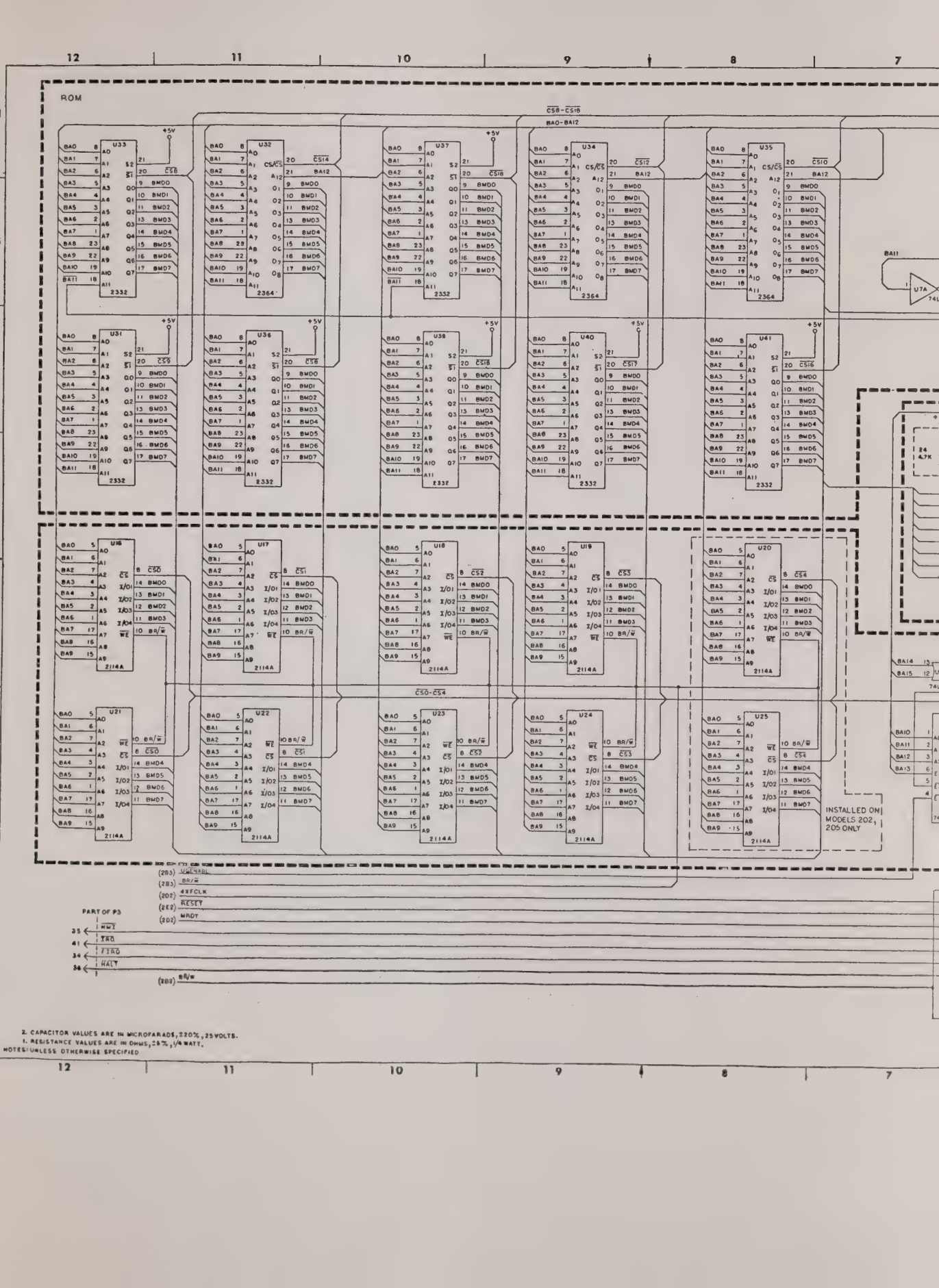

NOTES: UNLESS OTHERWISE SPECIFIED
1. RESISTANCE VALUES ARE IN OHMS, ±5%, 1/4 WATT.
2. CAPACITOR VALUES ARE IN MICROFARADS, ±20%, 25 VOLTS.

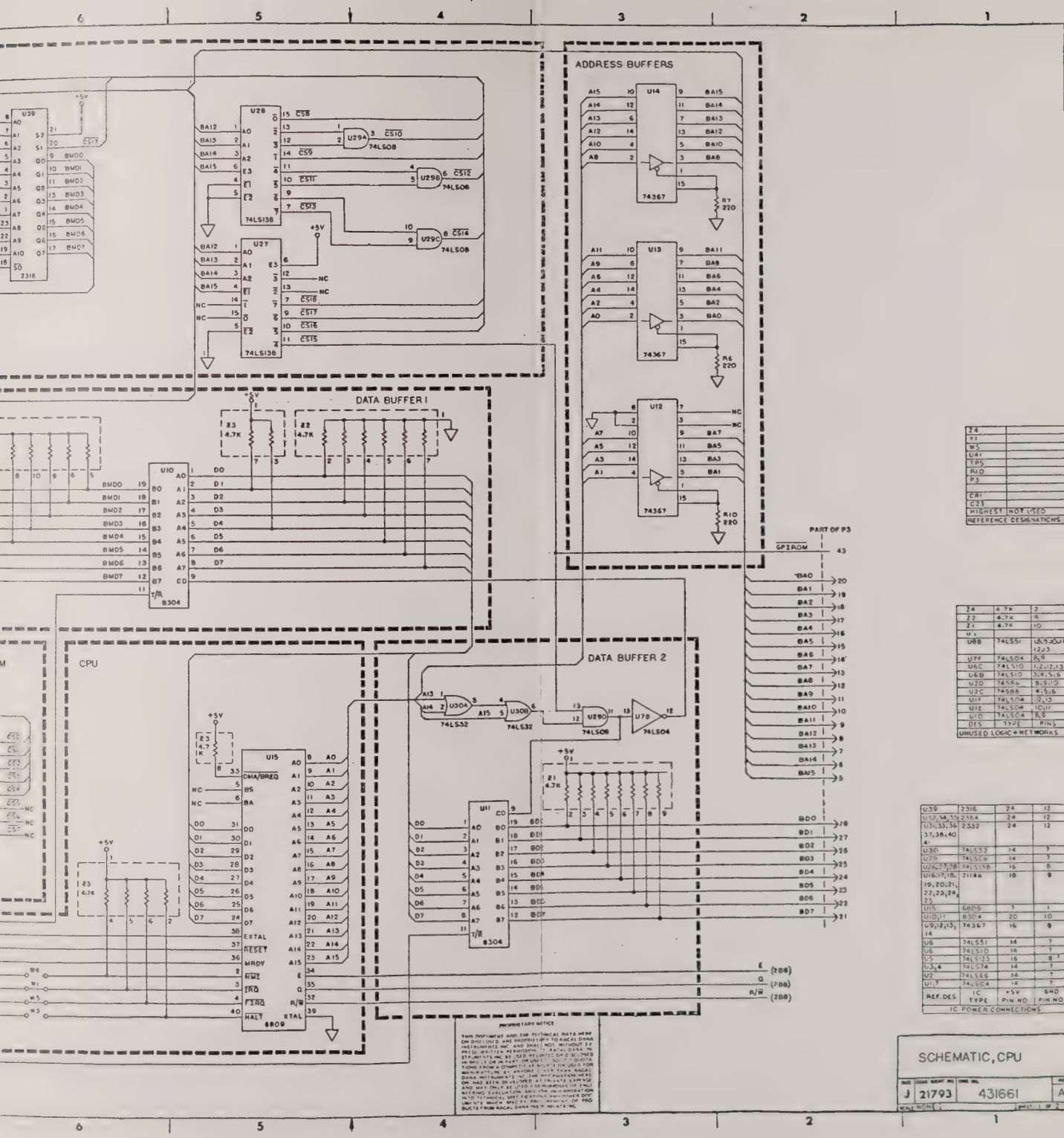

Z4	
Y1	
W5	
U41	
TP5	
R10	
P3	
CR1	
C23	
HIGHEST	NOT USED
REFERENCE DESIGNATIONS	

Z4	4.7K	2
Z2	4.7K	8
Z1	4.7K	10
U9		
U8B	74LS51	1,8,9,10,11 12,13
U7F	74LS04	8,9
U6C	74LS10	1,2,12,13
U6B	74LS10	3,4,5,6
U2D	74S86	8,9,10
U2C	74S86	4,5,6
U1F	74LS04	2,13
U1E	74LS04	10,11
U1D	74LS04	8,9
DES	TYPE	PINS
UNUSED LOGIC + NETWORKS		

U39	2316	24	12
U32,34,35	2364	24	12
U31,33,36 37,38,40 41	2332	24	12
U30	74LS32	14	7
U29	74LS08	14	7
U26,27,28	74LS138	16	8
U16,17,18, 19,20,21, 22,23,24, 25	2114A	18	9
U15	6809	7	1
U10,11	8304	20	10
U9,12,13, 14	74367	16	8
U8	74LS51	14	7
U6	74LS10	14	7
U5	74LS123	16	8
U3,4	74LS74	14	7
U2	74LS66	14	7
U1,7	74LS04	14	7
REF. DES	IC TYPE	+5V PIN NO	GND PIN NO
IC POWER CONNECTIONS			

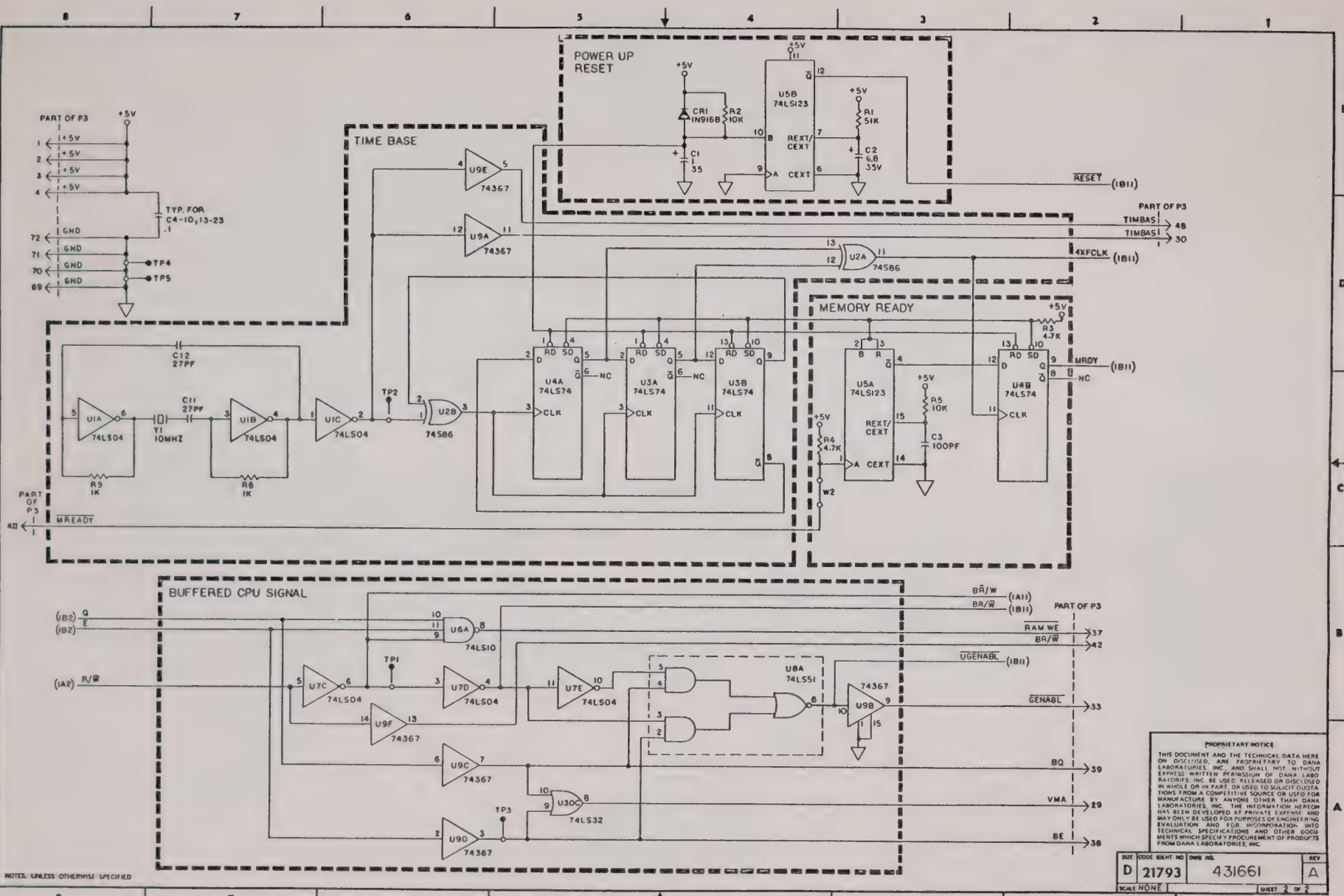

PROPRIETARY NOTICE

THIS DOCUMENT AND THE TECHNICAL DATA HERE ON DISCLOSED, ARE PROPRIETARY TO DANA LABORATORIES, INC., AND SHALL NOT WITHOUT EXPRESS WRITTEN PERMISSION OF DANA LABORATORIES INC. BE USED RELEASED OR DISCLOSED IN WHOLE OR IN PART, OR USED TO SOLICIT QUOTATIONS FROM A COMPETITIVE SOURCE OR USED FOR MANUFACTURE BY ANYONE OTHER THAN DANA LABORATORIES, INC. THE INFORMATION HEREON HAS BEEN DEVELOPED AT PRIVATE EXPENSE AND MAY ONLY BE USED FOR PURPOSES OF ENGINEERING EVALUATION AND FOR INCORPORATION INTO TECHNICAL SPECIFICATIONS AND OTHER DOCUMENTS WHICH SPECIFY PROCUREMENT OF PRODUCTS FROM DANA LABORATORIES, INC.

SIZE	CODE IDENT NO	DWG NO.	REV
D	21793	431661	A

SCALE NONE SHEET 2 OF 2

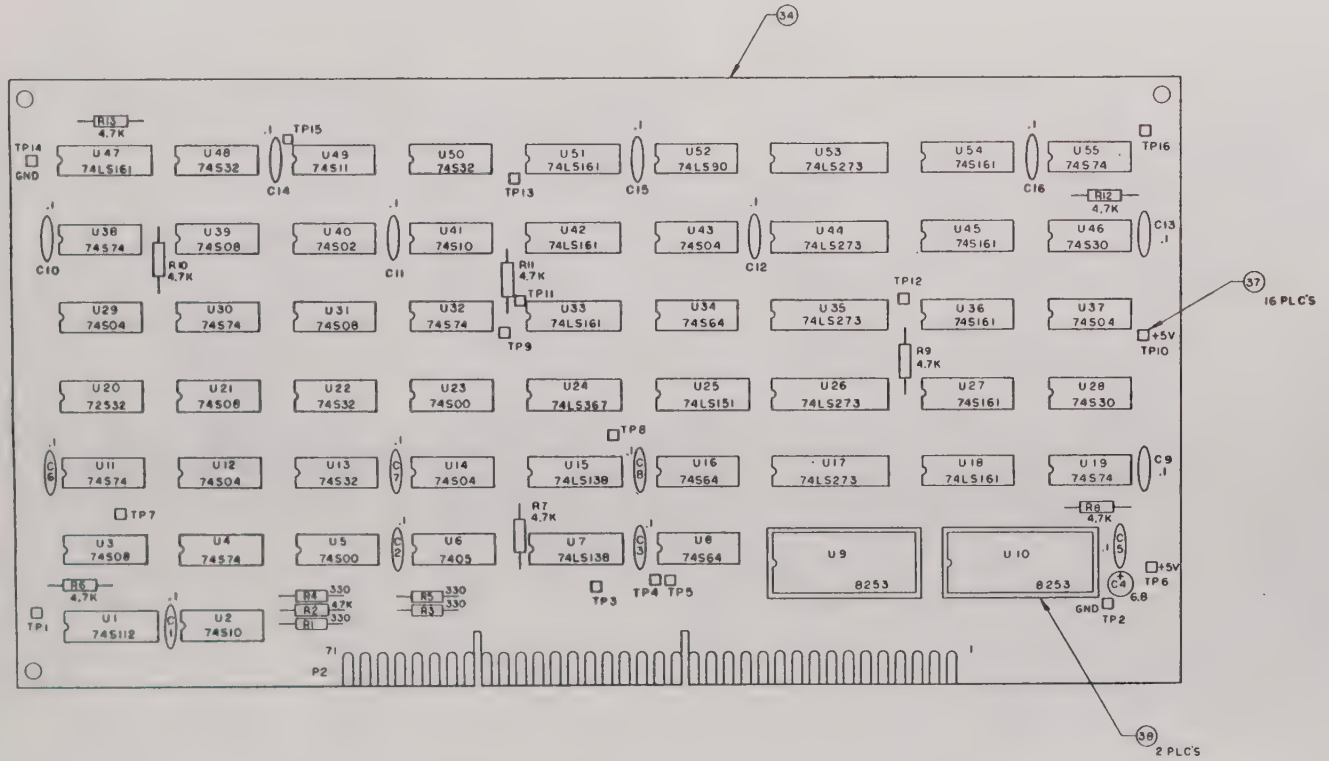

4. CAPACITORS ARE IN UF.
3. RESISTORS ARE IN OHMS.
2. REFERENCE SCHEMATIC NO. 431664
1. ASSEMBLY PROCESSES & PROCEDURES TO CONFORM TO RACAL-DANA WORKMANSHIP STANDARD.

NOTES: UNLESS OTHERWISE SPECIFIED

PROPRIETARY NOTICE

THIS DOCUMENT AND THE TECHNICAL DATA HEREON DISCLOSED ARE PROPRIETARY TO RACAL-DANA INSTRUMENTS INC. AND SHALL NOT WITHOUT EXPRESS WRITTEN PERMISSION OF RACAL-DANA INSTRUMENTS INC BE USED, RELEASED OR DISCLOSED IN WHOLE OR IN PART OR USED TO SOLICIT QUOTATIONS FROM A COMPETITIVE SOURCE OR USED FOR MANUFACTURE BY ANYONE OTHER THAN RACAL-DANA INSTRUMENTS INC. THE INFORMATION HEREIN IS, BEEN DEVELOPED AT PRIVATE EXPENSE AND MAY ONLY BE USED FOR PURPOSES OF EVALUATING, EVALUATION AND FOR INCORPORATION INTO TECHNICAL SPECIFICATIONS AND OTHER DOCUMENTS WHICH SPECIFY PROCUREMENT OF PRODUCTS FROM RACAL-DANA INSTRUMENTS INC.

PCB ASSY, CONTROL

SIZE	CODE IDENT NO	DWG NO.	REV
D	21793	401664	F

SCALE 2/1 SHEET 1 OF 3

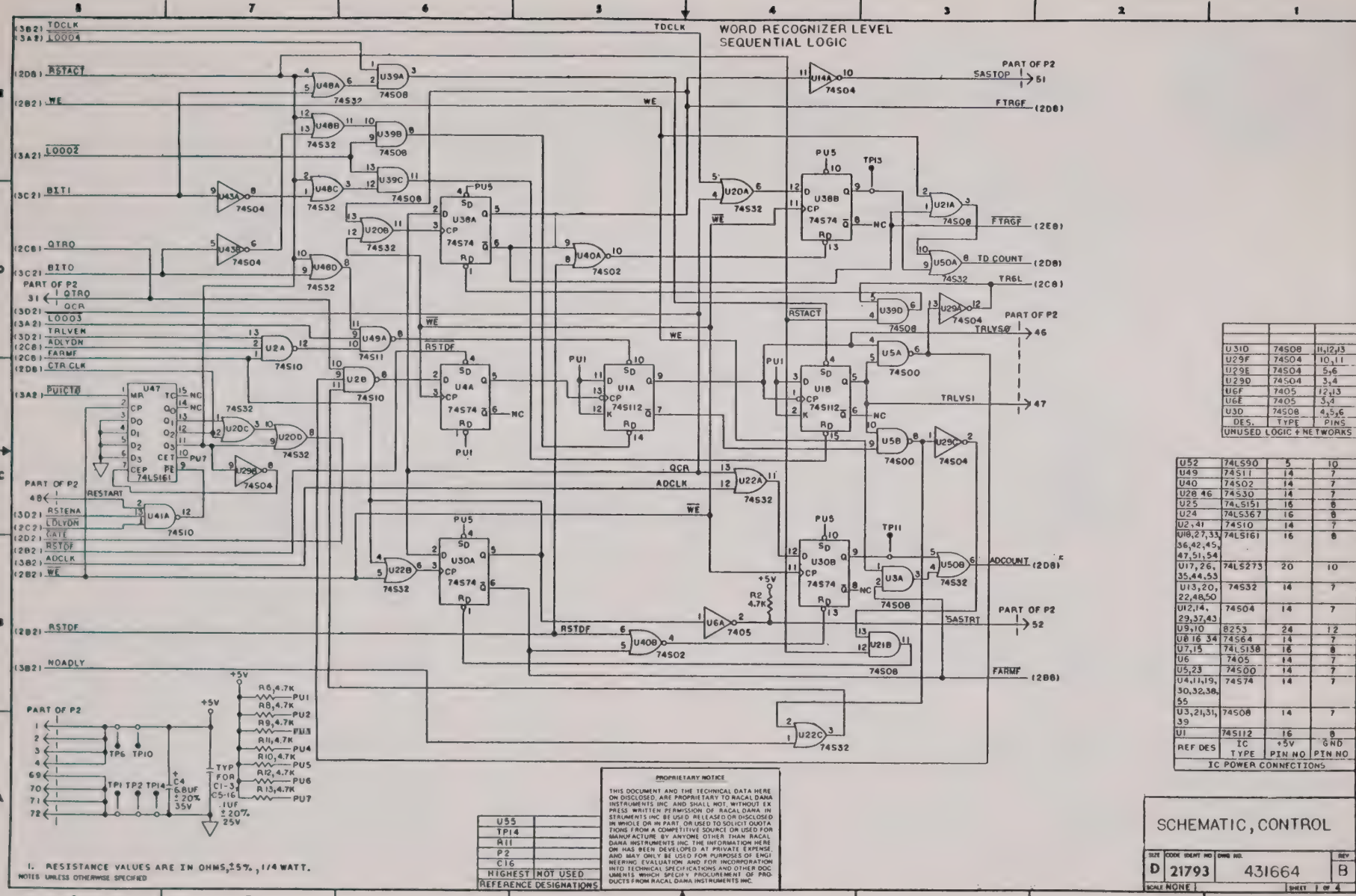

U310	74S08	11,12,13
U29F	74S04	10,11
U29E	74S04	5,6
U29D	74S04	3,4
U6F	7405	12,13
U6E	7405	3,4
U3D	74S08	4,5,6
DES.	TYPE	PINS

UNUSED LOGIC + NETWORKS

U52	74LS90	5	10
U49	74S11	14	7
U40	74S02	14	7
U28 46	74S30	14	7
U25	74LS151	16	8
U24	74LS367	16	8
U2,41	74S10	14	7
U18,27,33, 36,42,45, 47,51,54	74LS161	16	8
U17,26, 35,44,53	74LS273	20	10
U13,20, 22,48,50	74S32	14	7
U12,14, 29,37,43	74S04	14	7
U9,10	8253	24	12
U8 16 34	74S64	14	7
U7,15	74LS138	16	8
U6	7405	14	7
U5,23	74S00	14	7
U4,11,19, 30,32,38, 55	74S74	14	7
U3,21,31, 39	74S08	14	7
U1	74S112	16	8
REF DES	IC TYPE	+5V PIN NO	GND PIN NO

IC POWER CONNECTIONS

U55	
TP14	
All	
P2	
C16	
HIGHEST	NOT USED

REFERENCE DESIGNATIONS

PROPRIETARY NOTICE

THIS DOCUMENT AND THE TECHNICAL DATA HERE ON DISCLOSED ARE PROPRIETARY TO RACAL DANA INSTRUMENTS INC AND SHALL NOT, WITHOUT EX PRESS WRITTEN PERMISSION OF RACAL DANA IN STRUMENTS INC BE USED RELEASED OR DISCLOSED IN WHOLE OR IN PART, OR USED TO SOLICIT QUOTA TIONS FROM A COMPETITIVE SOURCE OR USED FOR MANUFACTURE BY ANYONE OTHER THAN RACAL DANA INSTRUMENTS INC. THE INFORMATION HERE ON HAS BEEN DEVELOPED AT PRIVATE EXPENSE, AND MAY ONLY BE USED FOR PURPOSES OF ENGI NEERING EVALUATION AND FOR INCORPORATION INTO TECHNICAL SPECIFICATIONS AND OTHER DOC UMENTS WHICH SPECIFY PROCUREMENT OF PRO DUCTS FROM RACAL DANA INSTRUMENTS INC.

SCHEMATIC, CONTROL

SIZE	CODE IDENT NO	DWG NO.	REV
D	21793	431664	B

SCALE NONE SHEET 1 OF 4

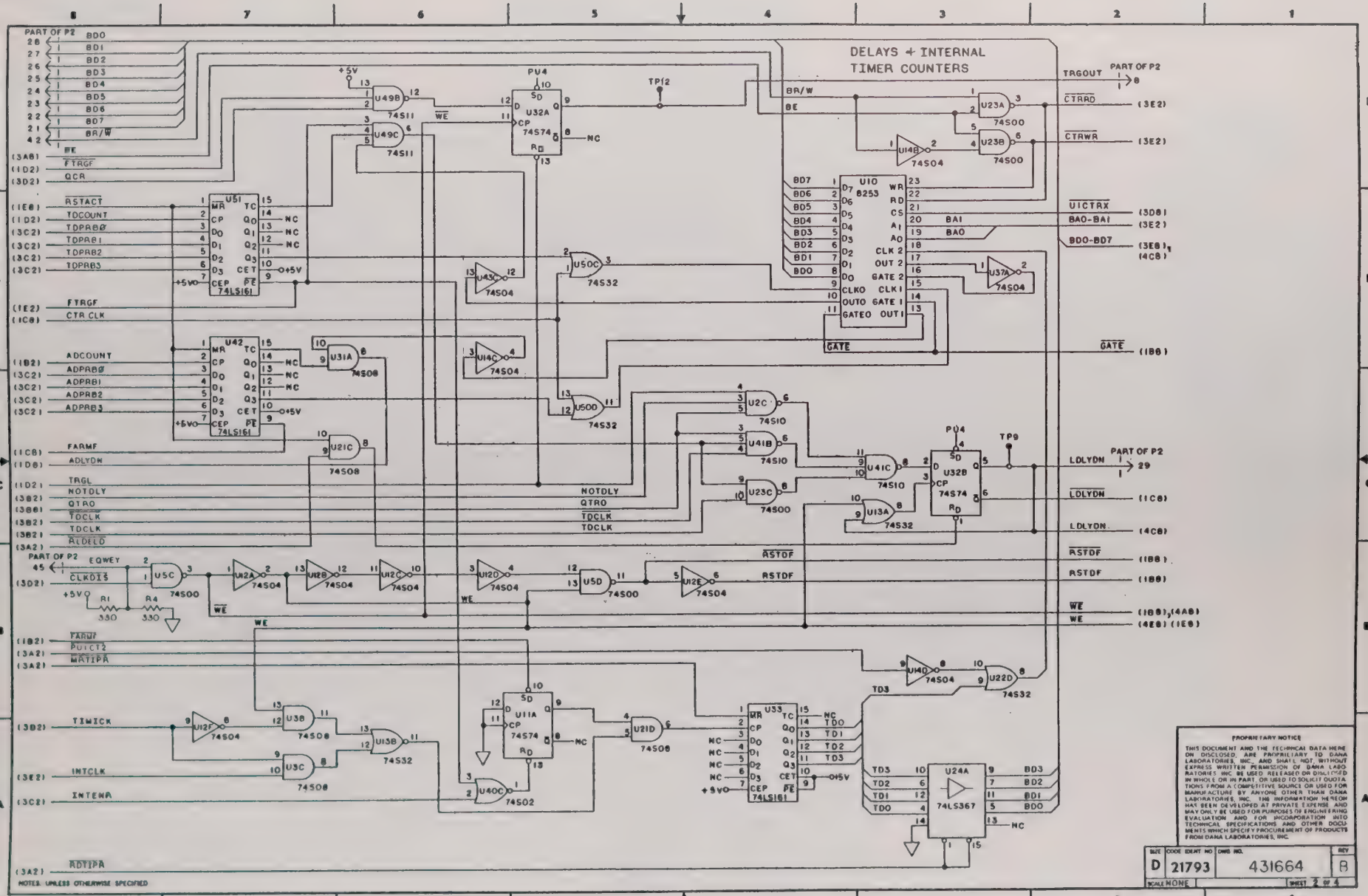
DELAYS + INTERNAL
TIMER COUNTERS
PART OF P2
BD0
BD1
BD2
BD3
BD4
BD5
BD6
BD7
BR/W
BE
FTRGF
QCR
RSTACT
TDCOUNT
TDPRB0
TDPRB1
TDPRB2
TDPRB3
CTR CLK
ADCOUNT
ADPRB0
ADPRB1
ADPRB2
ADPRB3
FARMF
ADLYDN
TRGL
NOTDLY
QTRO
TDCLK
RLDELD
EQWEY
CLKDIS
PUICT2
MRTIPR
TIMICK
INTCLK
INTENR
RDTIPR
TRGOUT
CTRRD
CTRWR
UICTRX
BA0-BA1
BD0-BD7
GATE
LDLYDN
RSTDF
WE
U51
U42
U10
8253
U32A
U32B
U11A
U33
74LS161
74LS367
74S74
74S00
74S04
74S08
74S32
74S10
74S02
74S11
NOTES: UNLESS OTHERWISE SPECIFIED
PROPRIETARY NOTICE
THIS DOCUMENT AND THE TECHNICAL DATA HERE ON DISCLOSED, ARE PROPRIETARY TO DANA LABORATORIES, INC., AND SHALL NOT, WITHOUT EXPRESS WRITTEN PERMISSION OF DANA LABORATORIES INC. BE USED, RELEASED OR DISCLOSED IN WHOLE OR IN PART, OR USED TO SOLICIT QUOTATIONS FROM A COMPETITIVE SOURCE OR USED FOR MANUFACTURE BY ANYONE OTHER THAN DANA LABORATORIES, INC. THE INFORMATION HEREON HAS BEEN DEVELOPED AT PRIVATE EXPENSE AND MAY ONLY BE USED FOR PURPOSES OF ENGINEERING EVALUATION AND FOR INCORPORATION INTO TECHNICAL SPECIFICATIONS AND OTHER DOCUMENTS WHICH SPECIFY PROCUREMENT OF PRODUCTS FROM DANA LABORATORIES, INC.
SIZE D
CODE IDENT NO 21793
DWG NO. 431664
REV B
SCALE NONE
SHEET 2 OF 4

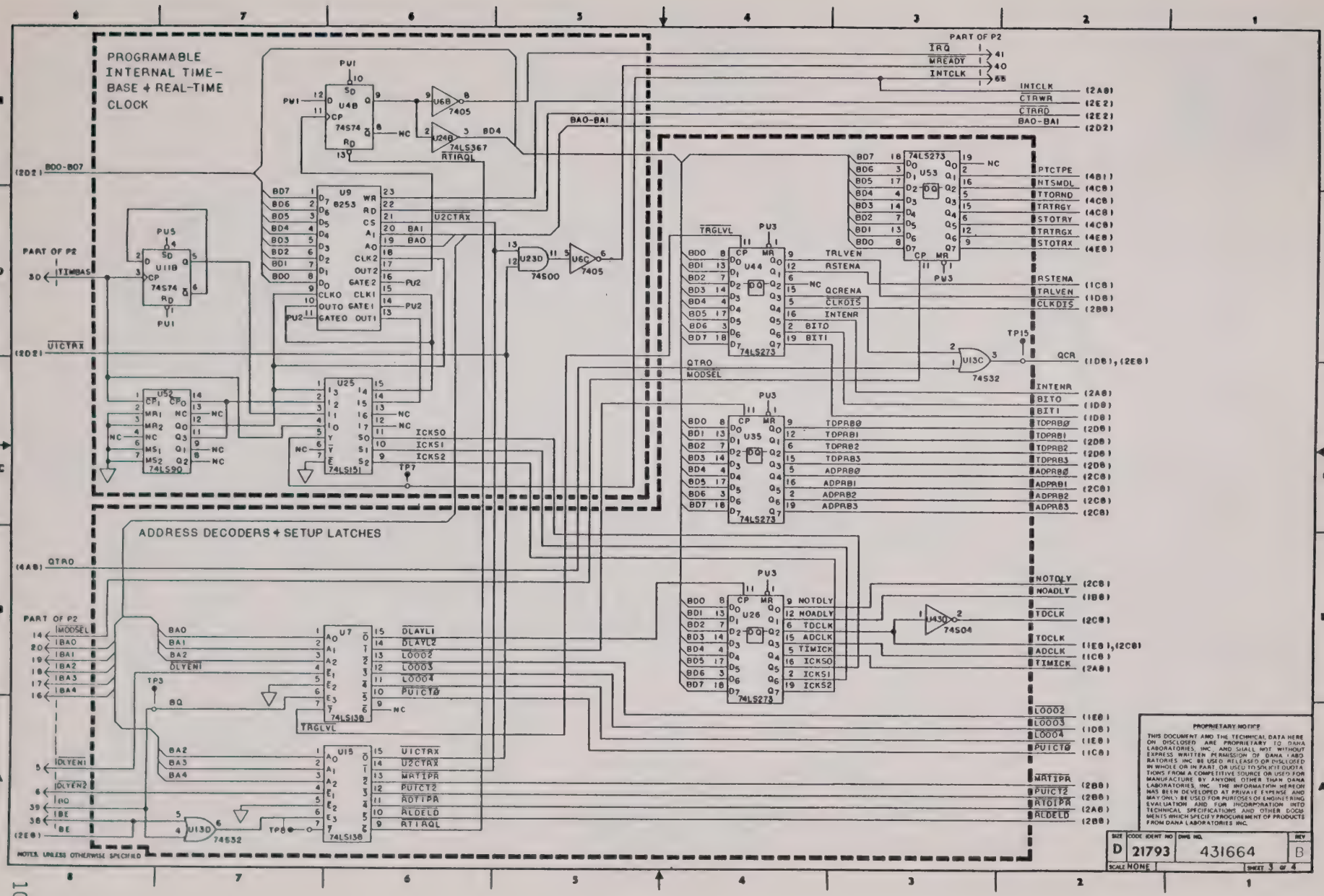
PROGRAMABLE INTERNAL TIME-BASE + REAL-TIME CLOCK
ADDRESS DECODERS + SETUP LATCHES
PART OF P2
IRQ
MREADY
INTCLK
CTRWR
CTRRD
BA0-BA1
BD0-BD7
TIMBAS
U1CTRX
QTRO
MODSEL
U4B 74S74
U6B 7405
U24B 74LS367
U9 8253
U11B 74S74
U52 74LS90
U25 74LS151
U23D 74S00
U6C 7405
U53 74LS273
U44 74LS273
U35 74LS273
U26 74LS273
U13C 74S32
U43D 74S04
U7 74LS138
U15 74LS138
U13D 74S32
PTCTPE
NTSMDL
TTORND
TRTRGY
STOTRY
TRTRGX
STOTRX
RSTENA
TRLVEN
CLKDIS
QCR
INTENR
BITO
BITI
TDPRB0
TDPRB1
TDPRB2
TDPRB3
ADPRB0
ADPRB1
ADPRB2
ADPRB3
NOTDLY
NOADLY
TDCLK
ADCLK
TIMICK
ICKS0
ICKS1
ICKS2
DLAYL1
DLAYL2
L0002
L0003
L0004
PUICT0
MRTIPR
PUICT2
RTDIPR
RLDELD
RTIRQL
U2CTRX
NOTES: UNLESS OTHERWISE SPECIFIED
PROPRIETARY NOTICE
THIS DOCUMENT AND THE TECHNICAL DATA HEREON DISCLOSED ARE PROPRIETARY TO DANA LABORATORIES, INC., AND SHALL NOT WITHOUT EXPRESS WRITTEN PERMISSION OF DANA LABORATORIES INC. BE USED, RELEASED OR DISCLOSED IN WHOLE OR IN PART, OR USED TO SOLICIT QUOTATIONS FROM A COMPETITIVE SOURCE OR USED FOR MANUFACTURE BY ANYONE OTHER THAN DANA LABORATORIES, INC. THE INFORMATION HEREON HAS BEEN DEVELOPED AT PRIVATE EXPENSE AND MAY ONLY BE USED FOR PURPOSES OF ENGINEERING EVALUATION AND FOR INCORPORATION INTO TECHNICAL SPECIFICATIONS AND OTHER DOCUMENTS WHICH SPECIFY PROCUREMENT OF PRODUCTS FROM DANA LABORATORIES INC.
SIZE D
CODE IDENT NO 21793
DWG NO. 431664
REV B
SCALE NONE
SHEET 3 OF 4

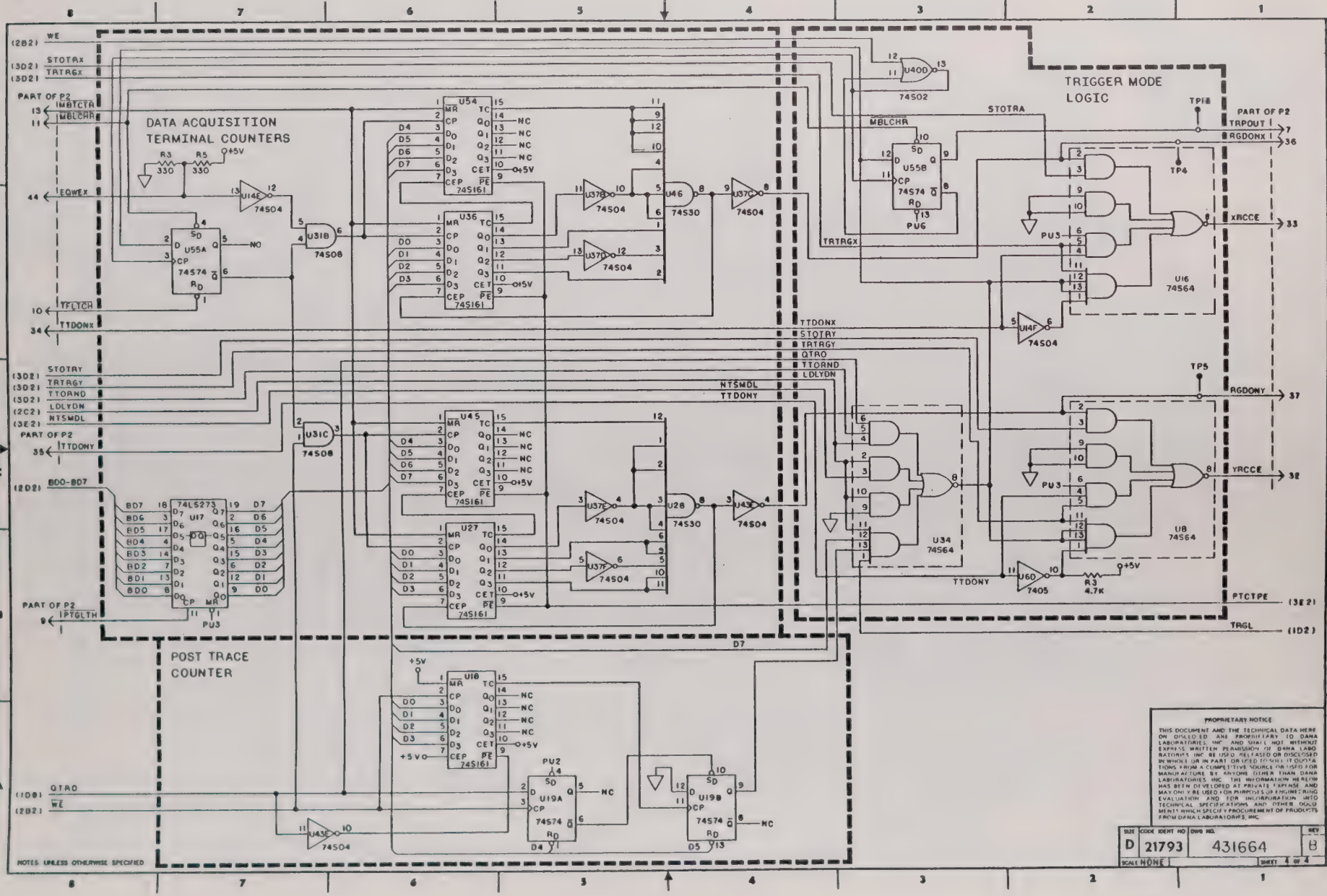

PROPRIETARY NOTICE
THIS DOCUMENT AND THE TECHNICAL DATA HERE ON DISCLOSED ARE PROPRIETARY TO DANA LABORATORIES, INC. AND SHALL NOT WITHOUT EXPRESS WRITTEN PERMISSION OF DANA LABORATORIES INC BE USED RELEASED OR DISCLOSED IN WHOLE OR IN PART OR USED TO SOLICIT OUTSIDE MANUFACTURE BY ANYONE OTHER THAN DANA LABORATORIES INC. THE INFORMATION HEREON HAS BEEN DEVELOPED AT PRIVATE EXPENSE AND MAY ONLY BE USED FOR PURPOSES OF ENGINEERING EVALUATION AND FOR INCORPORATION INTO TECHNICAL SPECIFICATIONS AND OTHER DOCUMENTS WHICH SPECIFY PROCUREMENT OF PRODUCTS FROM DANA LABORATORIES, INC.

SIZE	CODE IDENT NO	DWG NO.	REV
D	21793	431664	B
SCALE NONE		SHEET 4 of 4	

NOTES: UNLESS OTHERWISE SPECIFIED

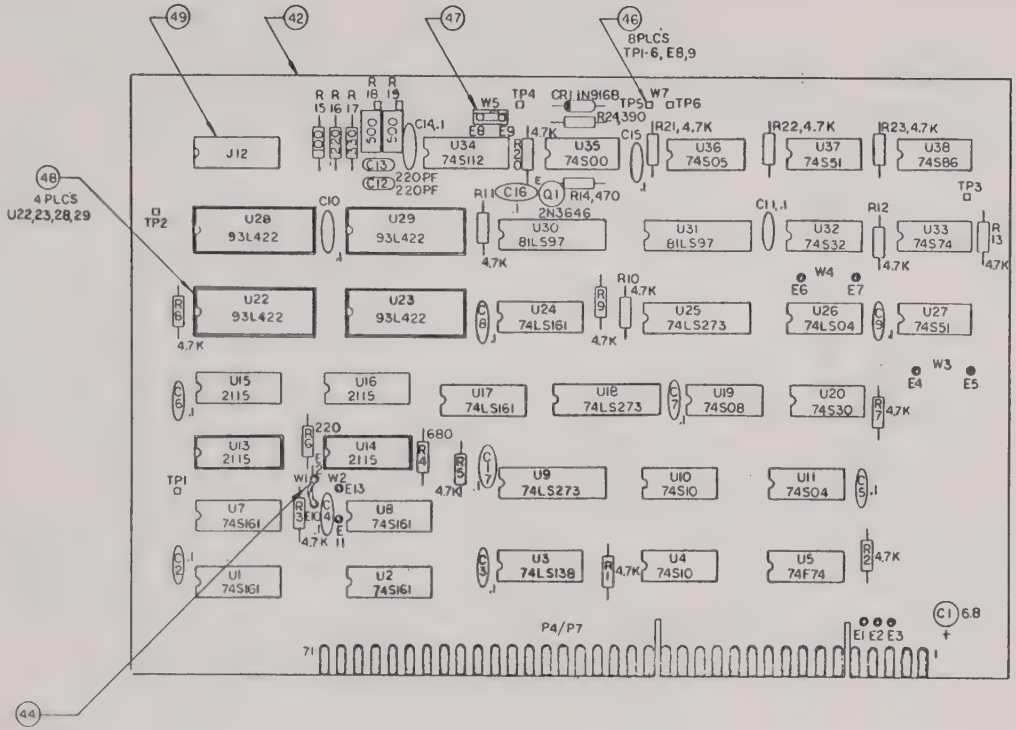

5. W 2,3,4,7 SHOWN FOR REF. ONLY.
4. CAPACITORS ARE IN UF.
3. RESISTORS ARE IN OHMS.
2. REFERENCE SCHEMATIC NO.431660.
1. ASSEMBLY PROCESSES & PROCEDURES TO CONFORM TO RACAL-DANA WORKMANSHIP STANDARD.

NOTES UNLESS OTHERWISE SPECIFIED

PROPRIETARY NOTICE

THIS DOCUMENT AND THE TECHNICAL DATA HERE ON DISCLOSED ARE PROPRIETARY TO RACAL DANA INSTRUMENTS INC AND SHALL NOT WITHOUT EX PRESS WRITTEN PERMISSION OF RACAL DANA IN STRUMENTS INC BE USED RELEASED OR DISCLOSED IN WHOLE OR IN PART OR USED TO SOLICIT QUOTA TIONS FROM A COMPETITIVE SOURCE OR USED FOR MANUFACTURE BY ANYONE OTHER THAN RACAL DANA INSTRUMENTS INC THE INFORMATION HERE ON HAS BEEN DEVELOPED AT PRIVATE EXPENSE AND MAY ONLY BE USED FOR PURPOSES OF ENGI NEERING EVALUATION AND FOR INCORPORATION INTO TECHNICAL SPECIFICATIONS AND OTHER DOC UMENTS WHICH SPECIFY PROCUREMENT OF PRO DUCTS FROM RACAL DANA INSTRUMENTS INC

PCB ASSY
CH X-Y INPUT

SIZE	CODE IDENT NO	DWG NO	REV
D	21793	404265	D

SCALE 2/1 SHEET 1 OF 3

10-43

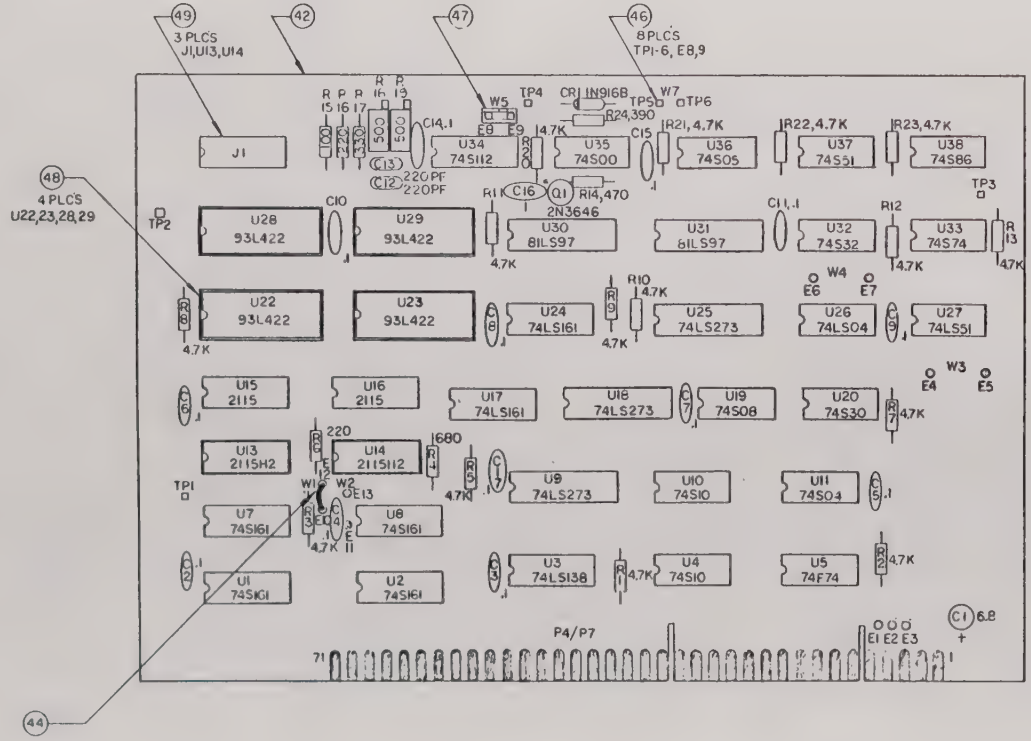

5. W 2,3,4,7 SHOWN FOR REF. ONLY.
4. CAPACITORS ARE IN UF.
3. RESISTORS ARE IN OHMS.
2. REFERENCE SCHEMATIC NO.431660.
1. ASSEMBLY PROCESSES & PROCEDURES TO CONFORM TO RACAL-DANA WORKMANSHIP STANDARD.

NOTES UNLESS OTHERWISE SPECIFIED

PROPRIETARY NOTICE

THIS DOCUMENT AND THE TECHNICAL DATA HERE ON DISCLOSED ARE PROPRIETARY TO RACAL DANA INSTRUMENTS INC AND SHALL NOT WITHOUT EXPRESS WRITTEN PERMISSION OF RACAL DANA INSTRUMENTS INC BE USED, RELEASED OR DISCLOSED IN WHOLE OR IN PART OR USED TO SOLICIT QUOTATIONS FROM A COMPETITIVE SOURCE OR USED FOR MANUFACTURE BY ANYONE OTHER THAN RACAL DANA INSTRUMENTS INC THE INFORMATION HERE ON HAS BEEN DEVELOPED AT PRIVATE EXPENSE AND MAY ONLY BE USED FOR PURPOSES OF ENGINEERING EVALUATION AND FOR INCORPORATION INTO TECHNICAL SPECIFICATIONS AND OTHER DOCUMENTS WHICH SPECIFY PROCUREMENT OF PRODUCTS FROM RACAL DANA INSTRUMENTS INC

PCB ASSY
CH X-Y INPUT

SIZE	CODE IDENT NO	DWG NO	REV
D	21793	401660	E

SCALE 2/1 SHEET 1 OF 2

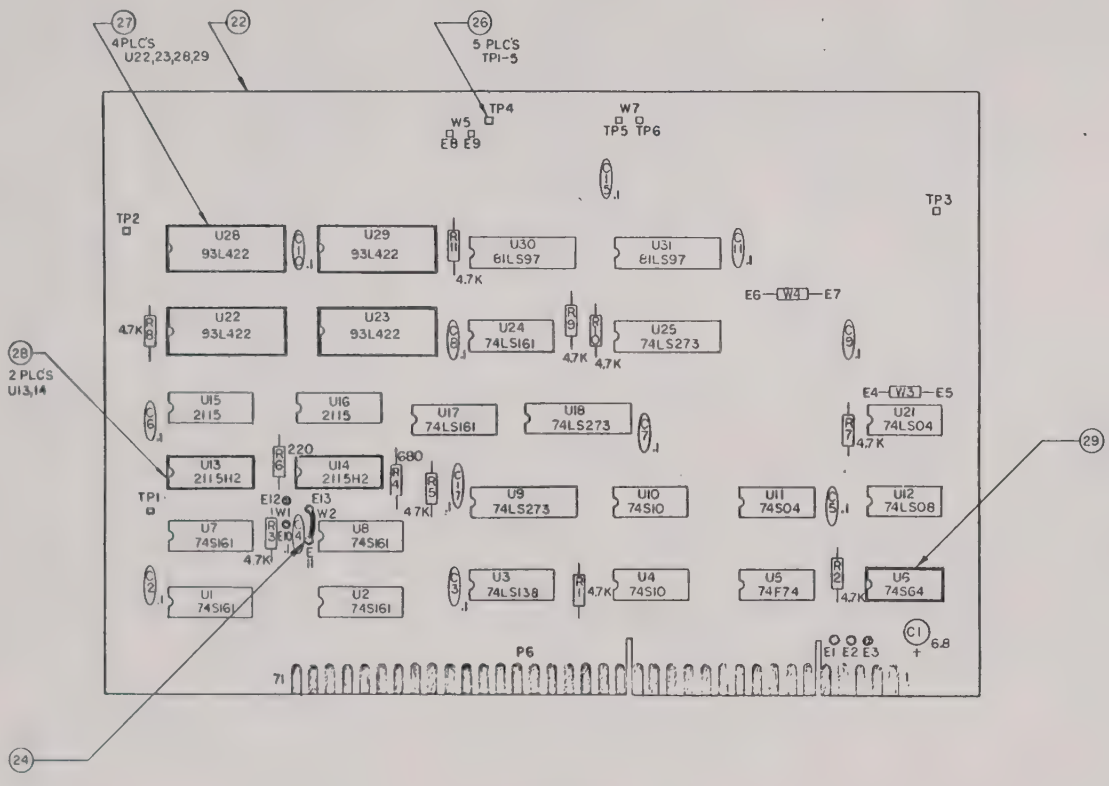

5. W1,5,7 AND TP6, SHOWN FOR REF ONLY
4. CAPACITORS ARE IN UF.
3. RESISTORS ARE IN OHMS
2. REFERENCE SCHEMATIC NO.431660
1. ASSEMBLY PROCESSES & PROCEDURES TO CONFORM TO WORKMANSHIP STANDARD.

NOTES: UNLESS OTHERWISE SPECIFIED

PROPRIETARY NOTICE

THIS DOCUMENT AND THE TECHNICAL DATA HERE ON DISCLOSED ARE PROPRIETARY TO RACAL DANA INSTRUMENTS INC AND SHALL NOT WITHOUT EXPRESS WRITTEN PERMISSION OF RACAL DANA INSTRUMENTS INC BE USED, RELEASED OR DISCLOSED IN WHOLE OR IN PART OR USED TO SOLICIT QUOTATIONS FROM A COMPETITIVE SOURCE OR USED FOR MANUFACTURE BY ANYONE OTHER THAN RACAL DANA INSTRUMENTS INC THE INFORMATION HEREON HAS BEEN DEVELOPED AT PRIVATE EXPENSE AND MAY ONLY BE USED FOR PURPOSES OF ENGINEERING, EVALUATION AND FOR INCORPORATION INTO TECHNICAL SPECIFICATIONS AND OTHER DOCUMENTS WHICH SPECIFY PROCUREMENT OF PRODUCTS FROM RACAL DANA INSTRUMENTS INC

PCB ASSY
CH 'Z' INPUT

SIZE	CODE IDENT NO	DWG NO.	REV
D	21793	404212	E

SCALE 2/1 SHEET 1 OF 3

10-45

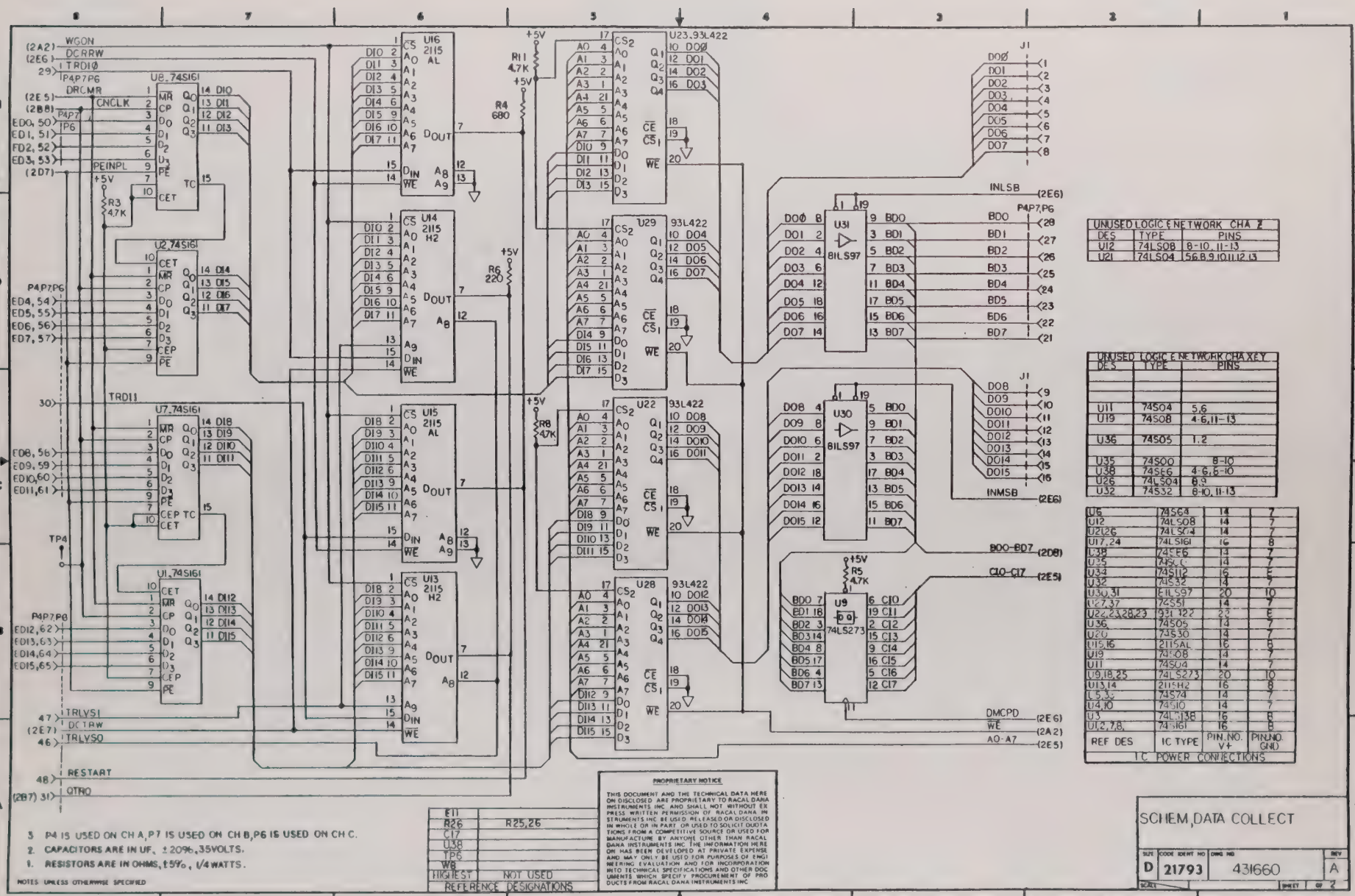

UNUSED LOGIC E NETWORK CHA Z		
DES	TYPE	PINS
U12	74LS08	8-10, 11-13
U21	74LS04	5&8,9,10,11,12,13

UNUSED LOGIC E NETWORK CHA XEY		
DES	TYPE	PINS
U11	74S04	5,6
U19	74S08	4-6,11-13
U36	74S05	1,2
U35	74S00	8-10
U38	74S66	4-6,8-10
U26	74LS04	8,9
U32	74S32	8-10, 11-13

U6	74S64	14	7
U12	74LS08	14	7
U21,26	74LS04	14	7
U17,24	74LS161	16	8
U38	74S66	14	7
U35	74S00	14	7
U34	74S112	16	8
U32	74S32	14	7
U30,31	81LS97	20	10
U27,37	74S51	14	7
U22,23,28,29	93L 422	22	8
U36	74S05	14	7
U20	73S30	14	7
U15,16	2115AL	16	8
U19	74S08	14	7
U11	74S04	14	7
U9,18,25	74LS273	20	10
U13,14	2115H2	16	8
U5,33	74S74	14	7
U4,10	74S10	14	7
U3	74LS138	16	8
U1,2,7,8,	74S161	16	8
REF DES	IC TYPE	PIN NO. V+	PIN NO. GND

IC POWER CONNECTIONS

E11	
R26	R25,26
C17	
U38	
TP6	
W8	
HIGHEST	NOT USED

REFERENCE DESIGNATIONS

3. P4 IS USED ON CH A, P7 IS USED ON CH B, P6 IS USED ON CH C.
2. CAPACITORS ARE IN UF, ±20%, 35VOLTS.
1. RESISTORS ARE IN OHMS, ±5%, 1/4 WATTS.

NOTES UNLESS OTHERWISE SPECIFIED

PROPRIETARY NOTICE

THIS DOCUMENT AND THE TECHNICAL DATA HERE ON DISCLOSED ARE PROPRIETARY TO RACAL DANA INSTRUMENTS INC AND SHALL NOT WITHOUT EX PRESS WRITTEN PERMISSION OF RACAL DANA IN STRUMENTS INC BE USED RELEASED OR DISCLOSED IN WHOLE OR IN PART OR USED TO SOLICIT DUCTA TIONS FROM A COMPETITIVE SOURCE OR USED FOR MANUFACTURE BY ANYONE OTHER THAN RACAL DANA INSTRUMENTS INC THE INFORMATION HERE ON HAS BEEN DEVELOPED AT PRIVATE EXPENSE AND MAY ONLY BE USED FOR PURPOSES OF ENGI NEERING EVALUATION AND FOR INCORPORATION INTO TECHNICAL SPECIFICATIONS AND OTHER DOC UMENTS WHICH SPECIFY PROCUREMENT OF PRO DUCTS FROM RACAL DANA INSTRUMENTS INC

SCHEM, DATA COLLECT

SIZE	CODE IDENT NO	DWG NO	REV
D	21793	431660	A
SCALE		SHEET 1 OF 2	

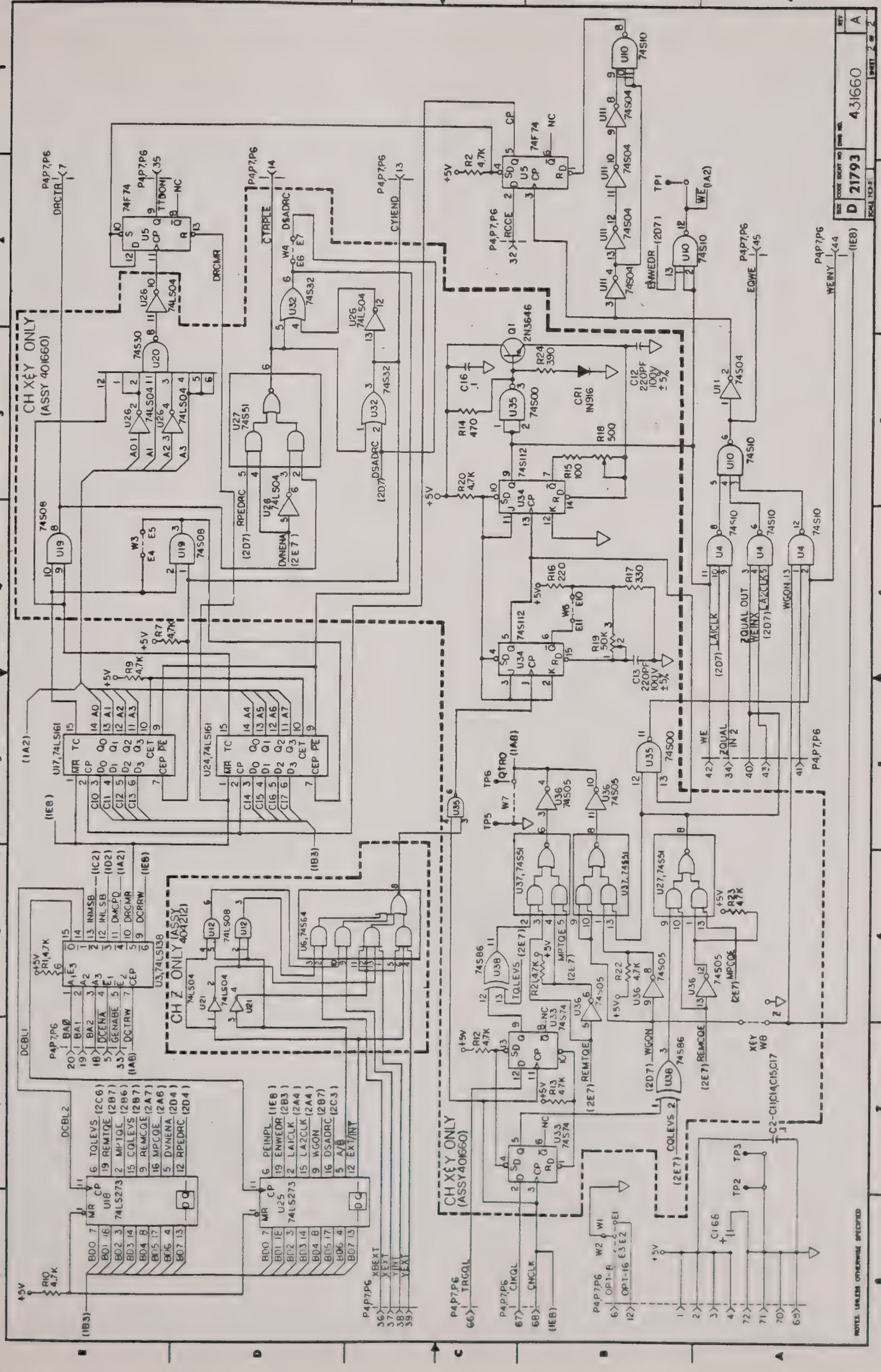
CH X&Y ONLY (ASSY 401660)
CH Z ONLY (ASSY 404212)
CH X&Y ONLY (ASSY401660)
D
21793
431660
A
NOTES: UNLESS OTHERWISE SPECIFIED

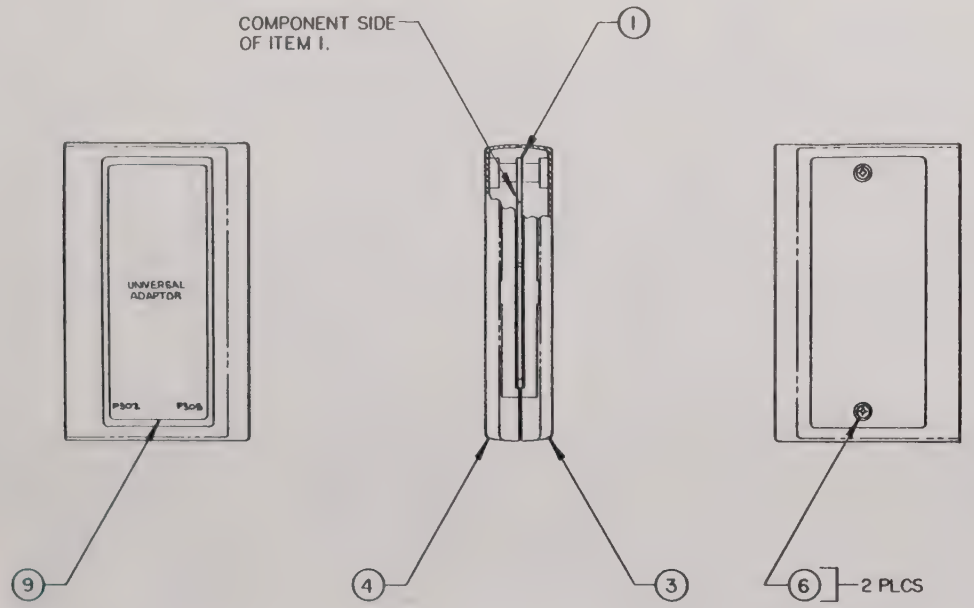

2. PLACE ASSEMBLED ADAPTOR AND ITS INSTRUCTION SHEET(ITEM 11) IN AN 8 X 10 PLASTIC BAG AND SEAL OR STAPLE CLOSED.
1. ASSEMBLY PROCESSES AND PROCEDURES TO CONFORM TO RACAL-DANA WORKMANSHIP STANDARDS.

NOTES: UNLESS OTHERWISE SPECIFIED

KIT ASSY, 8BT UP ADPT
OPTION 07

SIZE	CODE IDENT NO	DWG NO.	REV
C	21793	404298	A

SCALE NONE SHEET 1 OF 2

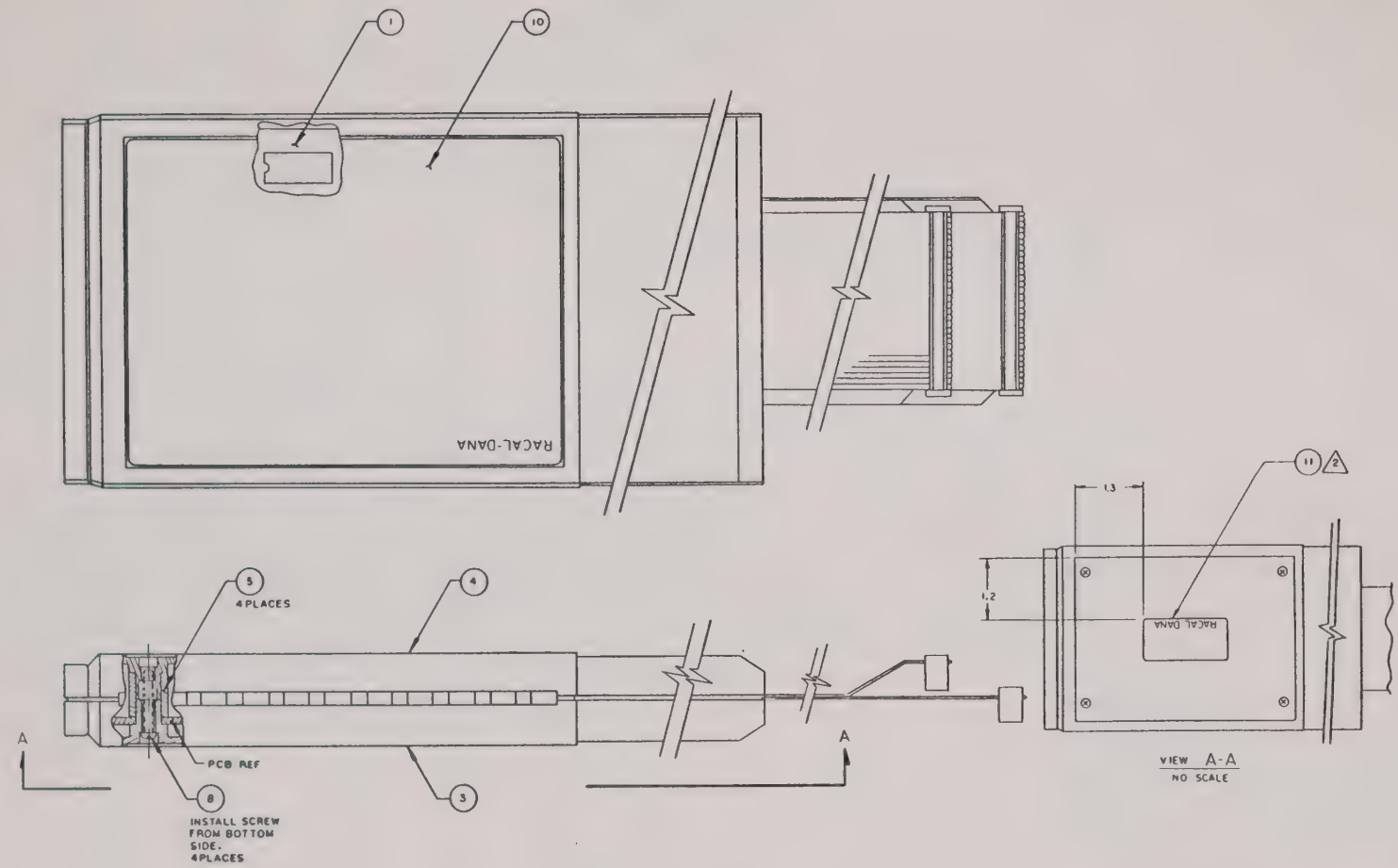

2 TYPE PERTINENT DATA ON ITEM 11. ATTACH ITEM 11 WHERE SHOWN.

1. ASSEMBLE PER RACAL-DANA WORKMANSHIP STANDARDS.

NOTES UNLESS OTHERWISE SPECIFIED

PROPRIETARY NOTICE

THIS DOCUMENT AND THE TECHNICAL DATA HERE ON DISCLOSED ARE PROPRIETARY TO RACAL-DANA INSTRUMENTS INC AND SHALL NOT WITHOUT EXPRESS WRITTEN PERMISSION OF RACAL-DANA INSTRUMENTS INC BE USED RELEASED OR DISCLOSED IN WHOLE OR IN PART OR USED TO SOLICIT QUOTATIONS FROM A COMPETITIVE SOURCE OR USED FOR MANUFACTURE BY ANYONE OTHER THAN RACAL DANA INSTRUMENTS INC THE INFORMATION HERE ON HAS BEEN DEVELOPED AT PRIVATE EXPENSE AND MAY ONLY BE USED FOR PURPOSES OF ENGINEERING EVALUATION AND FOR INCORPORATION INTO TECHNICAL SPECIFICATIONS AND OTHER DOCUMENTS WHICH SPECIFY PROCUREMENT OF PRODUCTS FROM RACAL DANA INSTRUMENTS INC

PROBE ASSY, 8BIT μP

SIZE	CODE IDENT NO	DWG NO.	REV
D	21793	404220	A

SCALE NONE SHEET 1 OF 2

10-49

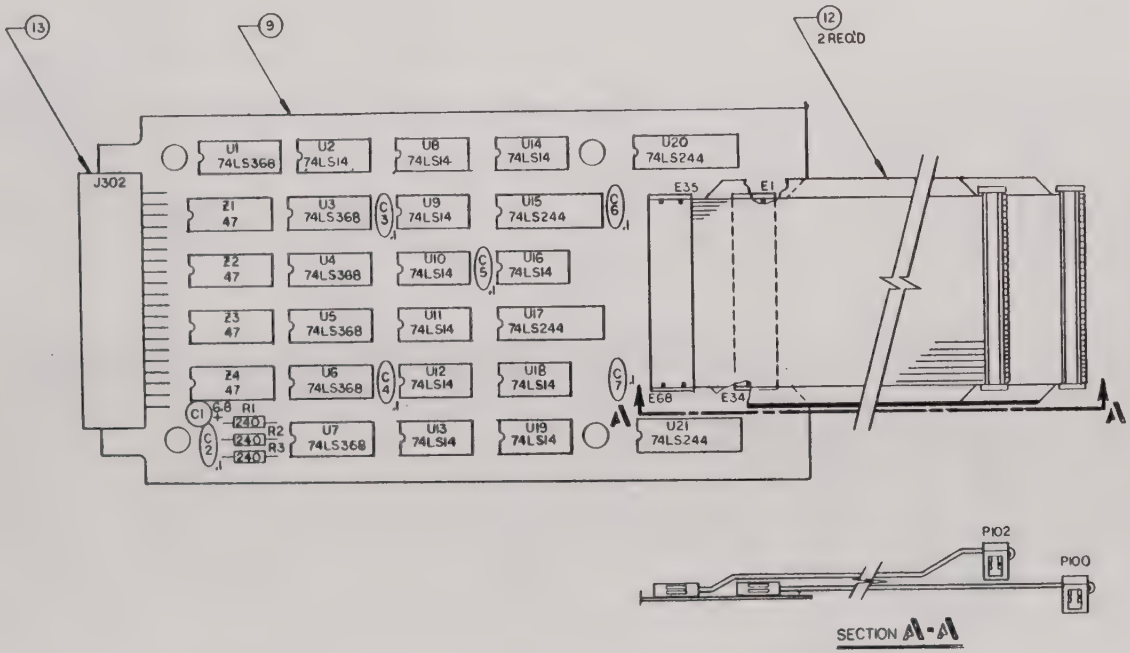

SECTION A-A

4 CAPACITORS ARE IN UF.
3 RESISTORS ARE IN OHMS.
2 REFERENCE SCHEMATIC NO. 431673.
1 ASSEMBLY PROCESSES & PROCEDURES TO CONFORM TO RACAL-DANA WORKMANSHIP STANDARD.

NOTES: UNLESS OTHERWISE SPECIFIED

PROPRIETARY NOTICE

THIS DOCUMENT AND THE TECHNICAL DATA HERE ON DISCLOSED ARE PROPRIETARY TO RACAL DANA INSTRUMENTS INC AND SHALL NOT WITHOUT EX PRESS WRITTEN PERMISSION OF RACAL DANA IN STRUMENTS INC BE USED RELEASED OR DISCLOSED IN WHOLE OR IN PART OR USED TO SOLICIT QUOTA TIONS FROM A COMPETITIVE SOURCE OR USED FOR MANUFACTURE BY ANYONE OTHER THAN RACAL DANA INSTRUMENTS INC THE INFORMATION HERE ON HAS BEEN DEVELOPED AT PRIVATE EXPENSE AND MAY ONLY BE USED FOR PURPOSES OF ENGI NEERING EVALUATION AND FOR INCORPORATION INTO TECHNICAL SPECIFICATIONS AND OTHER DOC UMENTS WHICH SPECIFY PROCUREMENT OF PRO DUCTS FROM RACAL DANA INSTRUMENTS INC

PCB ASSY 8 BIT µP PROBE

SIZE	CODE IDENT NO	DWG NO.	REV
D	21793	401673	C

SCALE 2/1 SHEET 1 OF 2

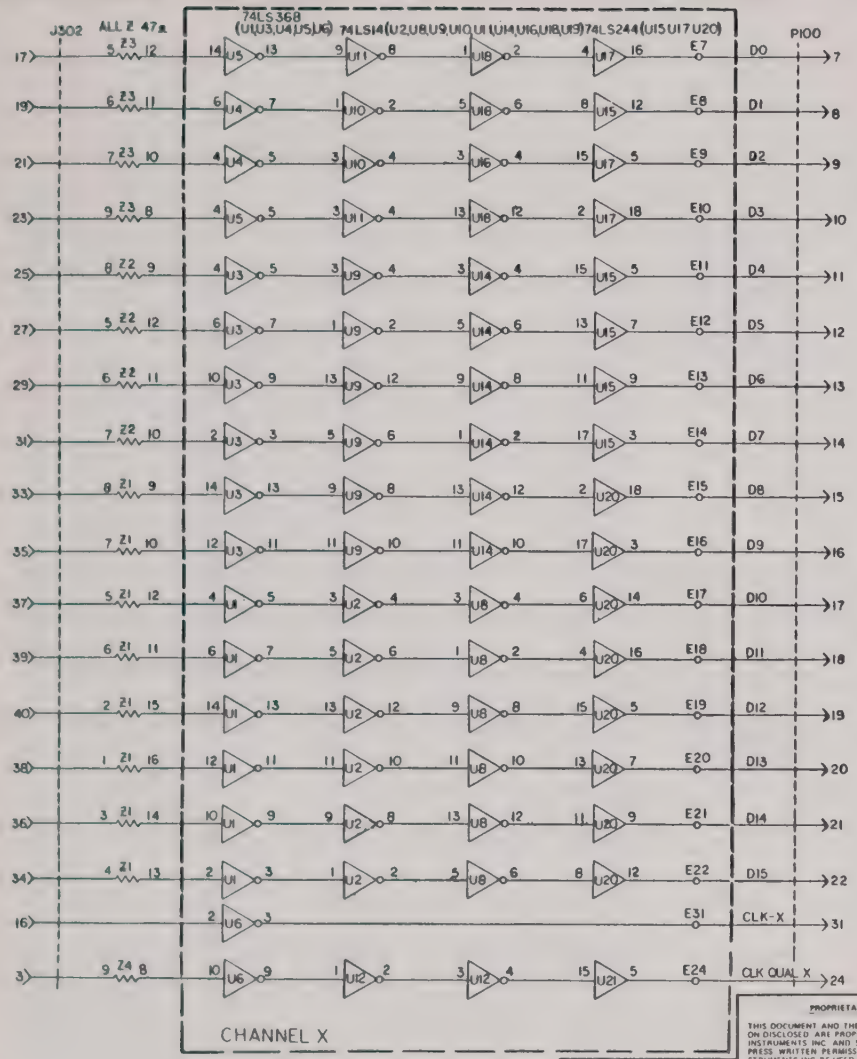

UNUSED LOGIC & NETWORK		
DES	TYPE	PIN
U6	74LS368	4,5,6,7
—	—	—
U13	74LS14	5,6
U19	74LS14	5,6

U15,U17,U20,U21	74LS244	20	1,10,19
U2,U8 – U14,U16,U18,U19	74LS14	14	7
U1,U3,U4,U5,U6,U7	74LS368	16	1,8,15
REF DES	IC TYPE	PIN NO V+	PIN NO GND
IC POWER CONNECTIONS			

R3	
Z4	
C7	
U21	
HIGHEST	NOT USED
REFERENCE DESIGNATIONS	

PROPRIETARY NOTICE

THIS DOCUMENT AND THE TECHNICAL DATA HERE ON DISCLOSED ARE PROPRIETARY TO RACAL DANA INSTRUMENTS INC AND SHALL NOT WITHOUT EX PRESS WRITTEN PERMISSION OF RACAL DANA IN STRUMENTS INC BE USED, RELEASED OR DISCLOSED IN WHOLE OR IN PART OR USED TO SOLICIT QUOTA TIONS FROM A COMPETITIVE SOURCE OR USED FOR MANUFACTURE BY ANYONE OTHER THAN RACAL DANA INSTRUMENTS INC THE INFORMATION HERE ON HAS BEEN DEVELOPED AT PRIVATE EXPENSE AND MAY ONLY BE USED FOR PURPOSES OF ENGI NEERING EVALUATION AND FOR INCORPORATION INTO TECHNICAL SPECIFICATIONS AND OTHER DOC UMENTS WHICH SPECIFY PROCUREMENT OF PRO DUCTS FROM RACAL DANA INSTRUMENTS INC.

NOTES UNLESS OTHERWISE SPECIFIED

SCHEM
8 BIT MICRO-PROCESSOR PROBE

SIZE	CODE IDENT NO	DWG NO.	REV
D	21793	431673	B

SCALE — SHEET 2 OF 2

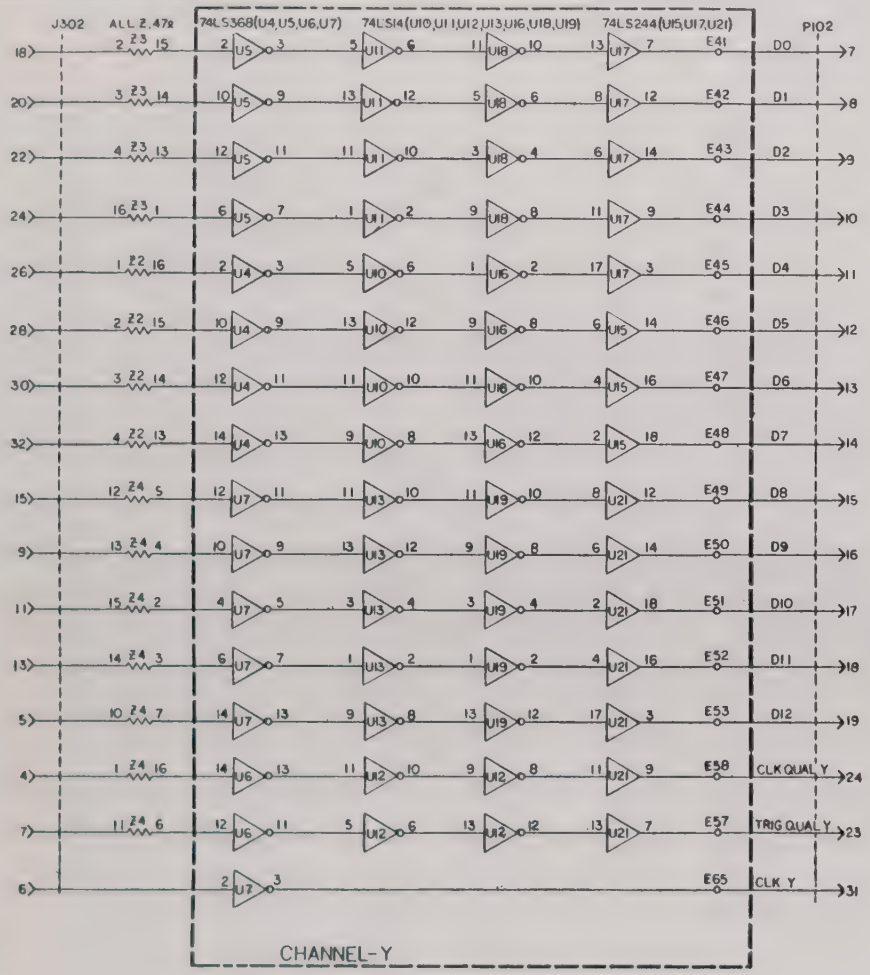

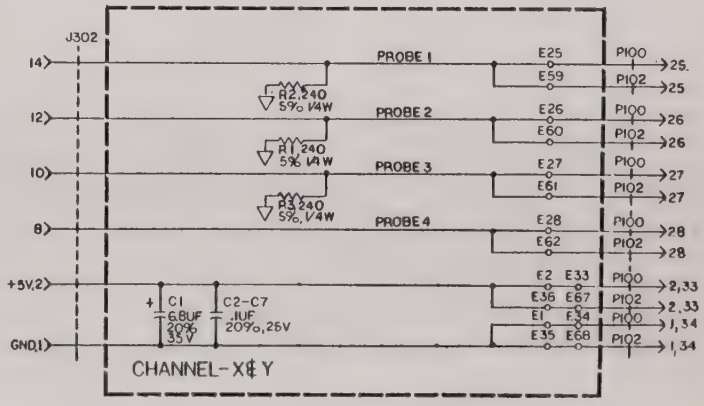

PROPRIETARY NOTICE
THIS DOCUMENT AND THE TECHNICAL DATA HERE ON DISCLOSED ARE PROPRIETARY TO DANA LABORATORIES INC AND SHALL NOT WITHOUT EXPRESS WRITTEN PERMISSION OF DANA LABORATORIES INC BE USED RELEASED OR DISCLOSED IN WHOLE OR IN PART OR USED TO SOLICIT QUOTATIONS FROM A COMPETITIVE SOURCE OR USED FOR MANUFACTURE BY ANYONE OTHER THAN DANA LABORATORIES, INC THE INFORMATION HEREON HAS BEEN DEVELOPED AT PRIVATE EXPENSE AND MAY ONLY BE USED FOR PURPOSES OF ENGINEERING EVALUATION AND FOR INCORPORATION INTO TECHNICAL SPECIFICATIONS AND OTHER DOCUMENTS WHICH SPECIFY PROCUREMENT OF PRODUCTS FROM DANA LABORATORIES, INC

SIZE	CODE IDENT NO	DWG NO	REV
D	21793	431673	B
SCALE		SHEET 2 OF 2	

NOTES: UNLESS OTHERWISE SPECIFIED

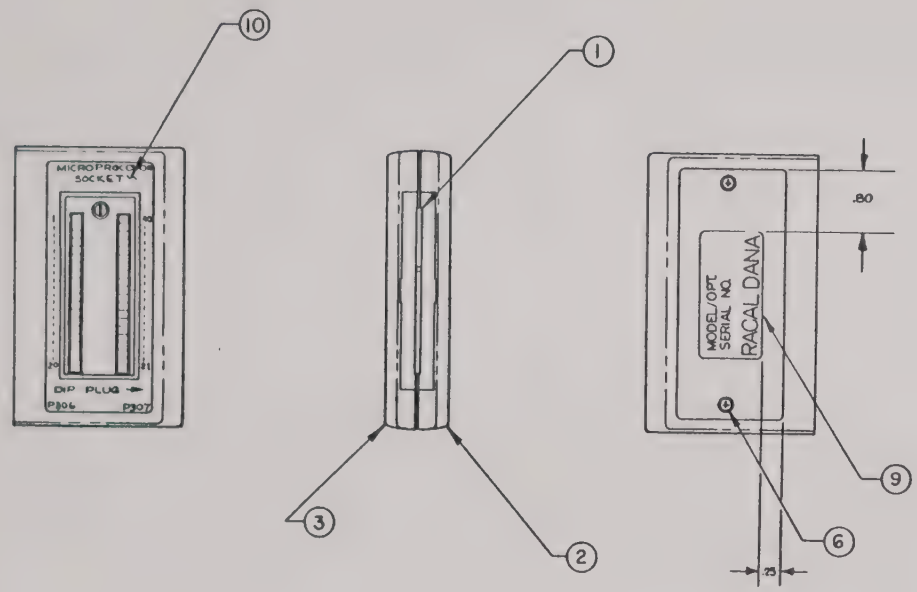

1. ASSEMBLY PROCESSES AND PROCEDURES TO CONFORM TO RACAL-DANA WORKMANSHIP STANDARDS.

NOTES: UNLESS OTHERWISE SPECIFIED

MODULE ASSY
40 PIN SOCKET

SIZE	CODE IDENT NO	DWG NO.	REV
C	21793	404249	A

SCALE NONE SHEET 1 OF 2

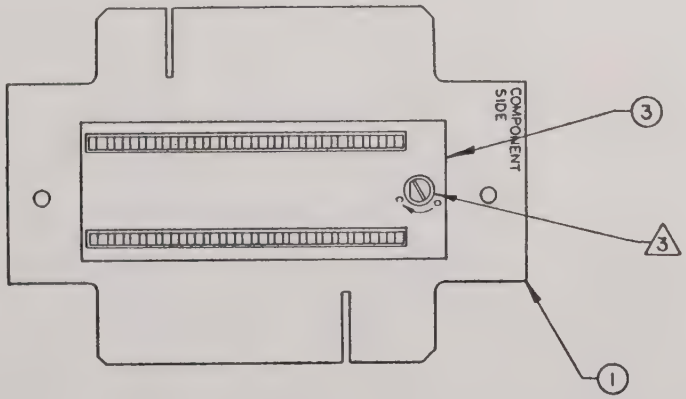

3. WHEN SOLDERING TO P.C. BOARD, CONTACTS MUST BE IN THE "OPEN" POSITION AS SHOWN.

2. SCHEMATIC REFERENCE NO. 431687.

1. ASSEMBLY PROCESSES AND PROCEDURES TO CONFORM TO RACAL-DANA WORKMANSHIP STANDARDS.

NOTES: UNLESS OTHERWISE SPECIFIED

PCB ASSY,
40 PIN SOCKET

SIZE	CODE IDENT NO	DWG NO.	REV
C	21793	401687	A

SCALE NONE SHEET 1 OF 2

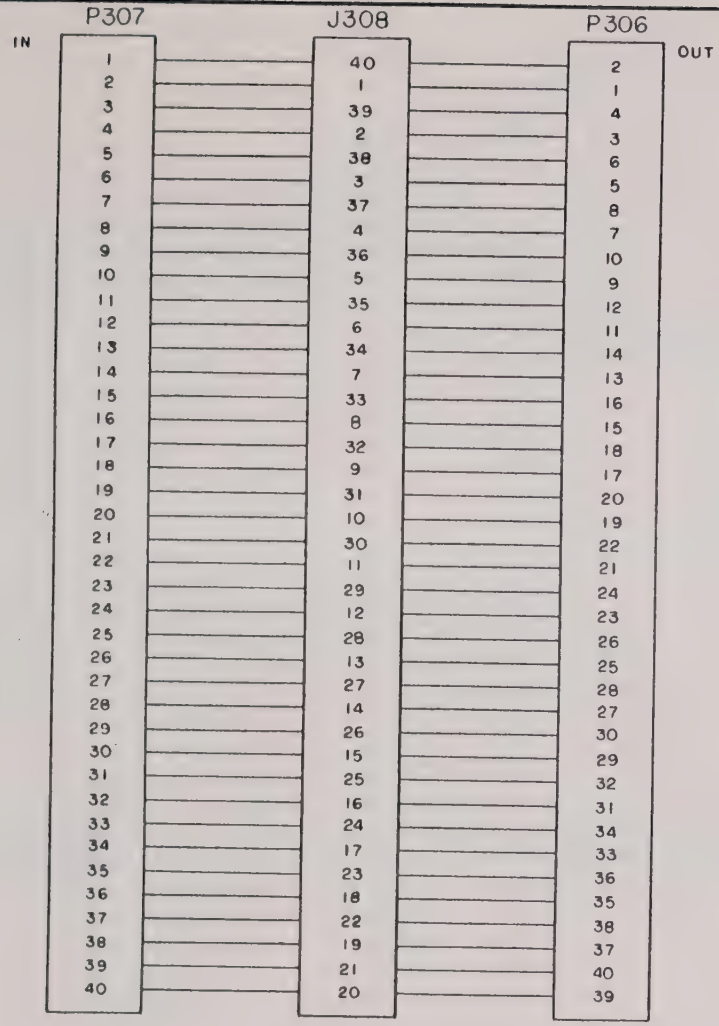

NOTES: UNLESS OTHERWISE SPECIFIED

SCHEM., 40 PIN SOCKET

SIZE	CODE IDENT NO	DWG NO.	REV
C	21793	431687	A

SCALE NONE SHEET 1 OF 1

10-55/10-56 Blank

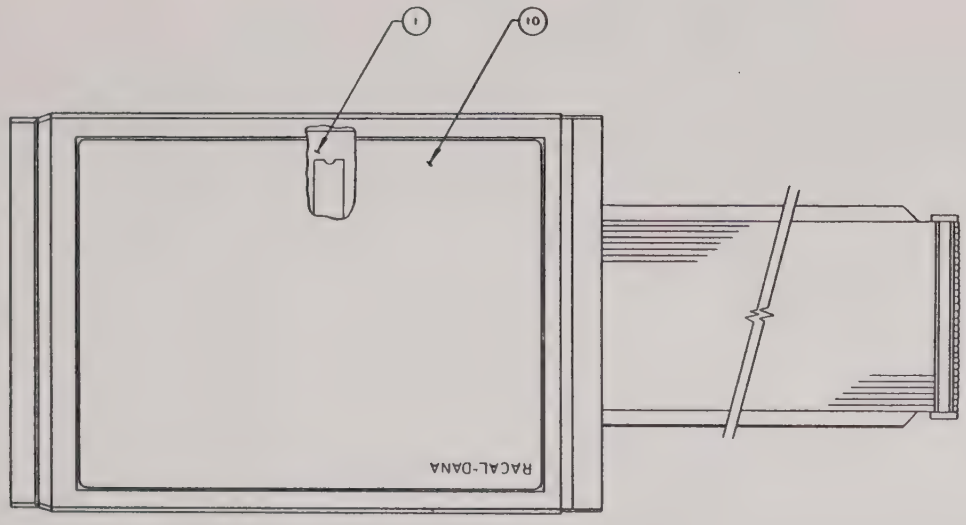

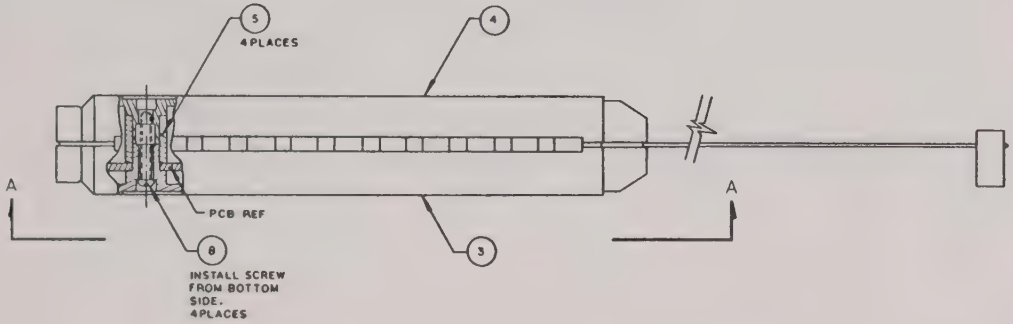

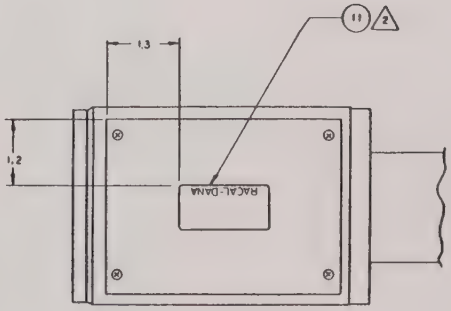

VIEW A-A
NO SCALE

3. "ITEM 7 TO BE SHIPPED WITH PROBE ASSY."

2 TYPE PERTINENT DATA ON ITEM 11. ATTACH ITEM 11 WHERE SHOWN.

1. ASSEMBLE PER RACAL-DANA WORKMANSHIP STANDARDS.

NOTES: UNLESS OTHERWISE SPECIFIED

PROPRIETARY NOTICE

THIS DOCUMENT AND THE TECHNICAL DATA HERE ON DISCLOSED ARE PROPRIETARY TO RACAL DANA INSTRUMENTS INC AND SHALL NOT WITHOUT EX PRESS WRITTEN PERMISSION OF RACAL DANA IN STRUMENTS INC BE USED RELEASED OR DISCLOSED IN WHOLE OR IN PART OR USED TO SOLICIT QUOTA TIONS FROM A COMPETITIVE SOURCE OR USED FOR MANUFACTURE BY ANYONE OTHER THAN RACAL DANA INSTRUMENTS INC THE INFORMATION HERE ON HAS BEEN DEVELOPED AT PRIVATE EXPENSE AND MAY ONLY BE USED FOR PURPOSES OF ENGI NEERING EVALUATION AND FOR INCORPORATION INTO TECHNICAL SPECIFICATIONS AND OTHER DOC UMENTS WHICH SPECIFY PROCUREMENT OF PRO DUCTS FROM RACAL DANA INSTRUMENTS INC

PROBE ASSY.GPIB ANLYZR

SIZE	CODE IDENT NO	DWG NO	REV
D	21793	404224	B

SCALE NONE SHEET 1 OF 2

10-57

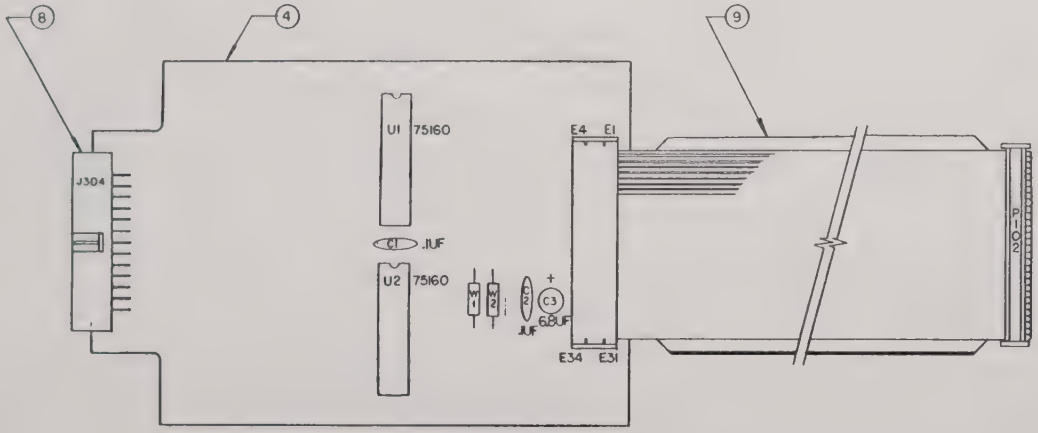

2. REFERENCE SCHEMATIC NO 431678
1 ASSEMBLY PROCESSES & PROCEDURES TO CONFORM TO RACAL DANA WORKMANSHIP STANDARD.

NOTES UNLESS OTHERWISE SPECIFIED

PROPRIETARY NOTICE

THIS DOCUMENT AND THE TECHNICAL DATA HERE ON DISCLOSED ARE PROPRIETARY TO RACAL DANA INSTRUMENTS INC AND SHALL NOT WITHOUT EX PRESS WRITTEN PERMISSION OF RACAL DANA IN STRUMENTS INC BE USED RELEASED OR DISCLOSED IN WHOLE OR IN PART OR USED EXCEPT UNDER A TIONS FROM A COMPETITIVE SOURCE OR USED FOR MANUFACTURE BY ANYONE OTHER THAN RACAL DANA INSTRUMENTS INC THE INFORMATION HERE ON HAS BEEN DEVELOPED AT PRIVATE EXPENSE AND MAY ONLY BE USED FOR PURPOSES OF ENGI NEERING EVALUATION AND THE INCORPORATION INTO TECHNICAL SPECIFICATI AND OTHER DOC UMENTS WHICH SPECIFY PROCUREMENT OF PRO DUCTS FROM RACAL DANA INSTRUMENTS INC

PCB ASSY, GPIB
ANALY PROBE

SIZE	CODE IDENT NO	DWG NO	REV
D	21793	401678	A

SCALE 2/1 SHEET OF 2

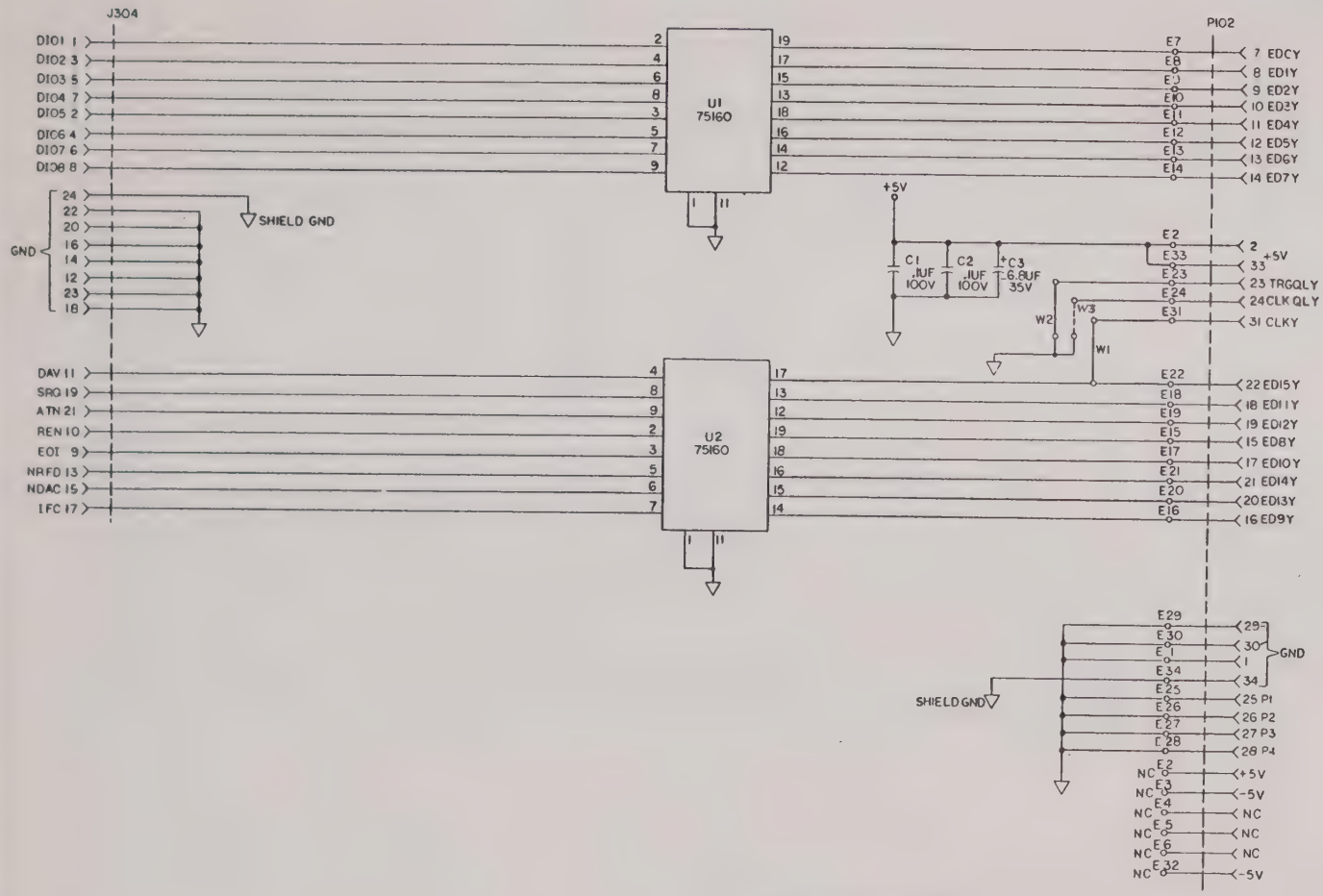

U1,2	75160	20	10
REF DES.	IC TYPE	+5 V PIN NO.	GND PIN NO.

IC POWER CONNECTIONS

E34
P102
J304
C3
W3
U2
HIGHEST NOT USED

REFERENCE DESIGNATIONS

PROPRIETARY NOTICE

THIS DOCUMENT AND THE TECHNICAL DATA HERE ON DISCLOSED, ARE PROPRIETARY TO RACAL DANA INSTRUMENTS INC AND SHALL NOT WITHOUT EXPRESS WRITTEN PERMISSION OF RACAL DANA INSTRUMENTS INC BE USED, RELEASED OR DISCLOSED IN WHOLE OR IN PART OR USED TO SOLICIT QUOTATIONS FROM A COMPETITIVE SOURCE OR USED FOR MANUFACTURE BY ANYONE OTHER THAN RACAL DANA INSTRUMENTS INC THE INFORMATION HERE ON HAS BEEN DEVELOPED AT PRIVATE EXPENSE AND MAY ONLY BE USED FOR PURPOSES OF ENGINEERING EVALUATION AND FOR INCORPORATION INTO TECHNICAL SPECIFICATIONS AND OTHER DOCUMENTS WHICH SPECIFY PROCUREMENT OF PRODUCTS FROM RACAL DANA INSTRUMENTS INC

NOTES UNLESS OTHERWISE SPECIFIED

SCHEM,GPIB ANALYZER PROBE

SIZE	CODE IDENT NO	DWG NO.	REV
D	21793	431678	B

SCALE | SHEET | OF

10-60

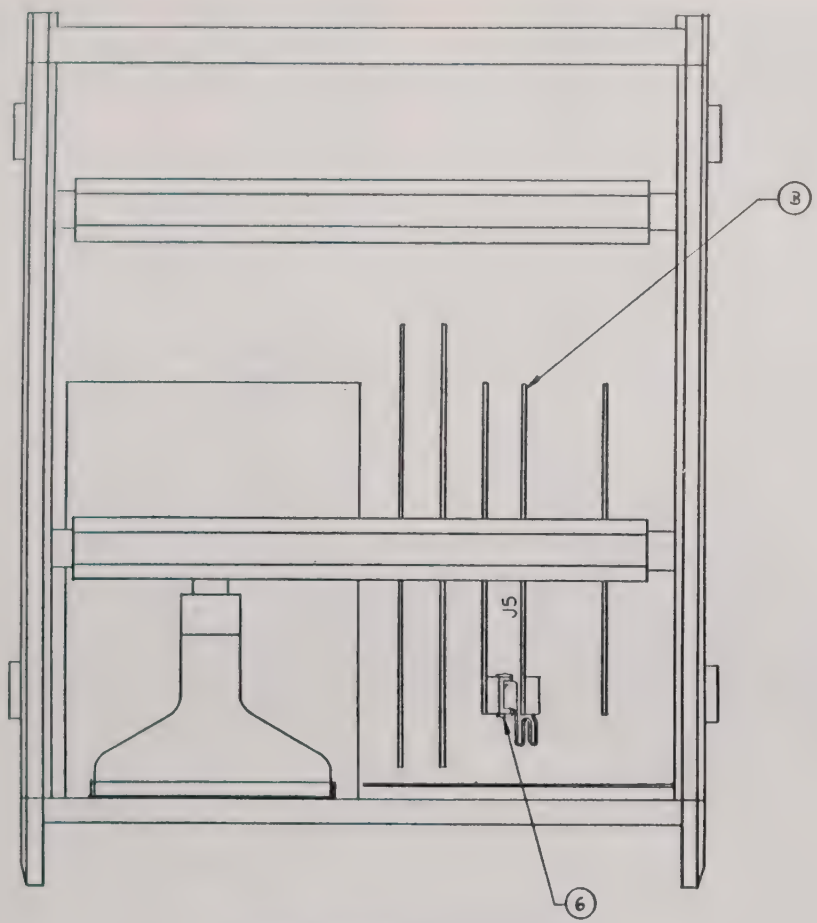

COVER NOT SHOWN FOR CLARITY

2. ITEM 4 TO BE SHIPPED WITH OPTION ASSY.

1. ASSEMBLE PER RACAL-DANA WORKMANSHIP STANDARDS.

NOTES: UNLESS OTHERWISE SPECIFIED

WORD GEN. ASSY, OPT.49

SIZE	CODE IDENT NO	DWG NO.	REV
C	21793	404223	B

SCALE NONE SHEET OF 2

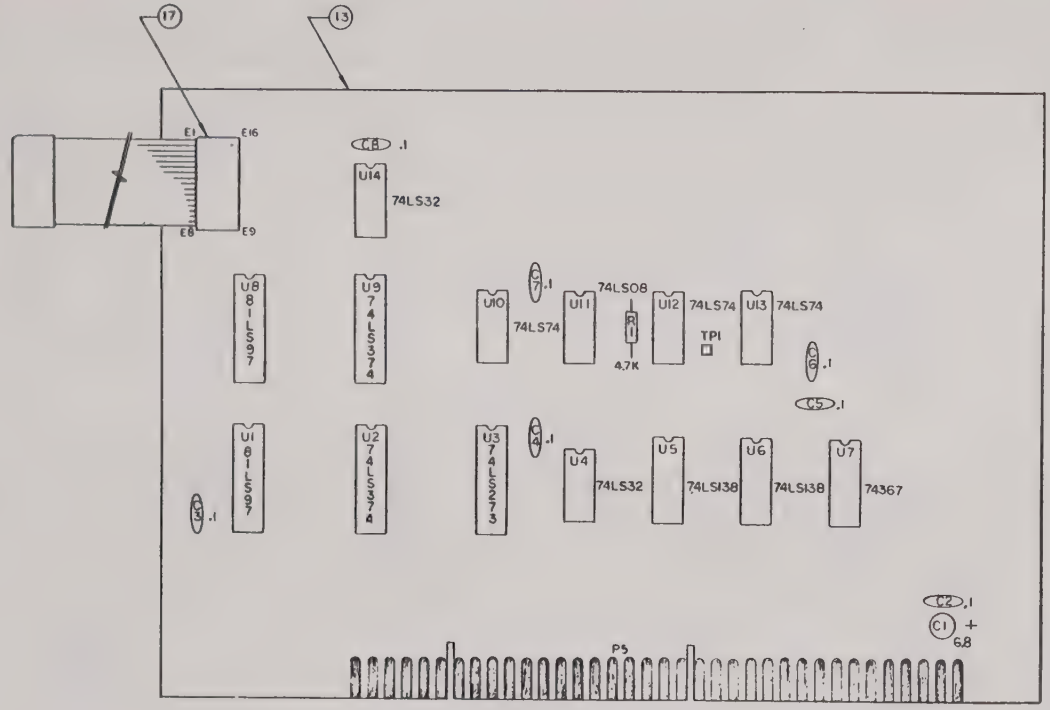

4 CAPACITORS ARE IN UF.
3 RESISTORS ARE IN OHMS.
2 REFERENCE SCHEMATIC NO. 431663.
1 ASSEMBLY PROCESSES PROCEDURES TO CONFORM TO RACAL DANA WORKMANSHIP STANDARD.

NOTES UNLESS OTHERWISE SPECIFIED

PROPRIETARY NOTICE

THIS DOCUMENT AND THE TECHNICAL DATA HERE IN DISCLOSED ARE PROPRIETARY TO RACAL DANA INSTRUMENTS INC. AND SHALL NOT WITHOUT EX PRESS WRITTEN PERMISSION OF RACAL DANA IN STRUMENTS INC BE USED, RELEASED OR DISCLOSED IN WHOLE OR IN PART, OR USED TO SOLICIT QUOTA TIONS FROM A COMPETITIVE SOURCE OR USED FOR MANUFACTURE BY ANYONE OTHER THAN RACAL DANA INSTRUMENTS INC. THE INFORMATION HERE ON HAS BEEN DEVELOPED AT PRIVATE EXPENSE AND MAY ONLY BE USED FOR PURPOSES OF ENGI NEERING EVALUATION AND FOR INCORPORATION INTO TECHNICAL SPECIFICATIONS AND OTHER DOC UMENTS WHICH SPECIFY PROCUREMENT OF PRO DUCTS FROM RACAL DANA INSTRUMENTS INC

PCB ASSY
WORD GENERATOR

SIZE	CODE IDENT NO	DWG NO.	REV
D	21793	401663	B

SCALE 2/1 SHEET 1 OF 2

10-61

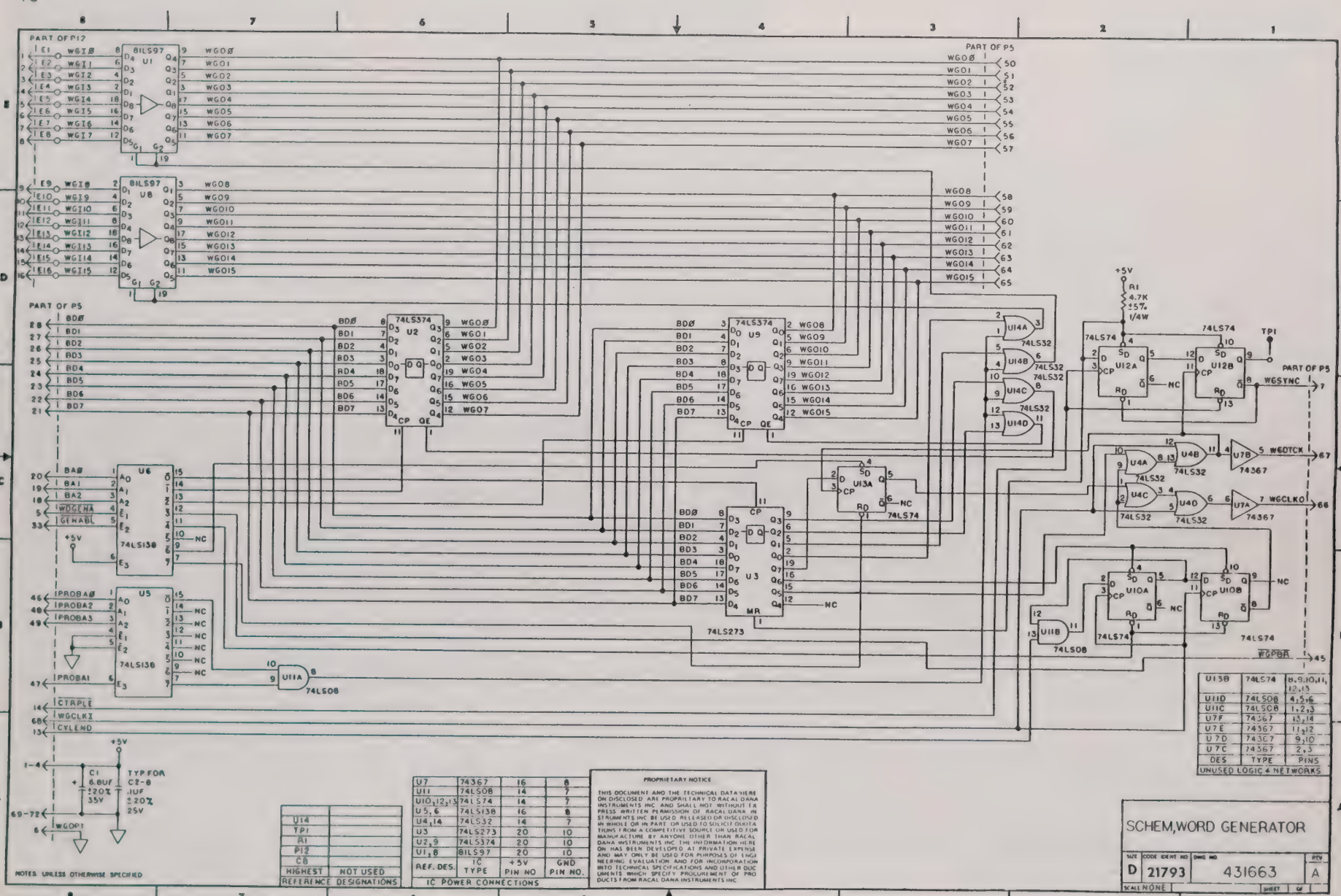

U14	
TP1	
A1	
P12	
C8	
HIGHEST	NOT USED

REFERENCE DESIGNATIONS

REF. DES.	IC TYPE	+5V PIN NO	GND PIN NO.
U7	74367	16	8
U11	74LS08	14	7
U10,12,13	74LS74	14	7
U5,6	74LS138	16	8
U4,14	74LS32	14	7
U3	74LS273	20	10
U2,9	74LS374	20	10
U1,8	8ILS97	20	10

IC POWER CONNECTIONS

U13B	74LS74	8,9,10,11, 12,13
U11D	74LS08	4,5,6
U11C	74LS08	1,2,3
U7F	74367	13,14
U7E	74367	11,12
U7D	74367	9,10
U7C	74367	2,3
DES	TYPE	PINS

UNUSED LOGIC & NETWORKS

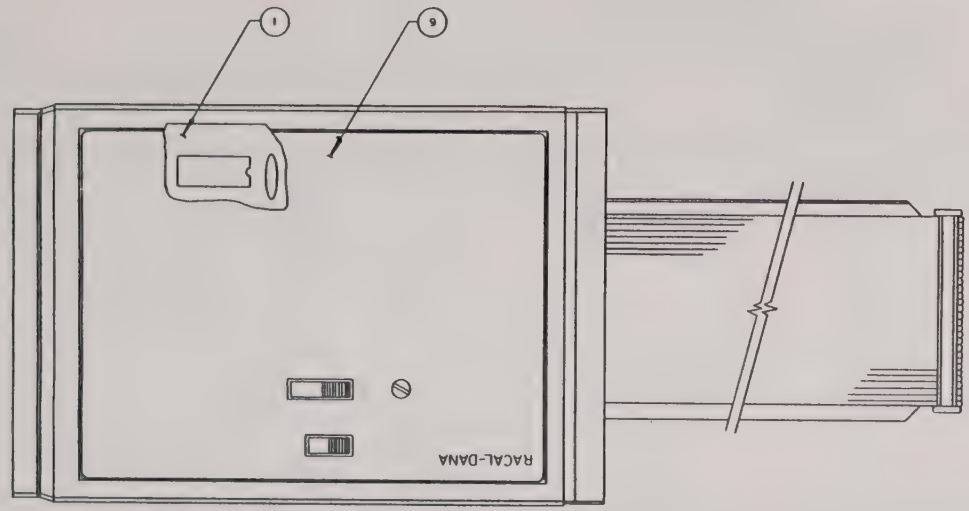

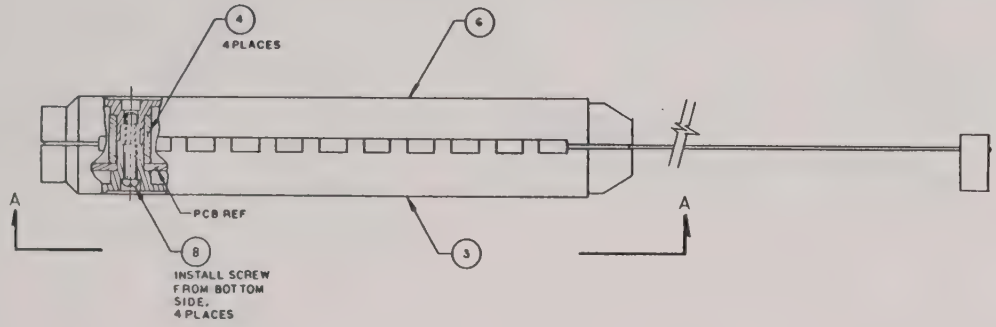

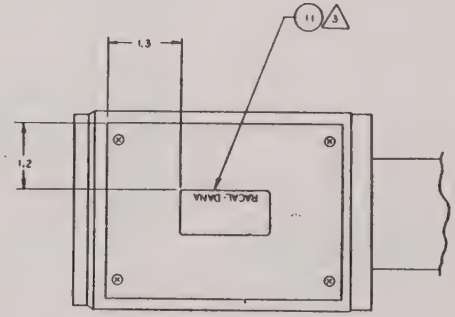

VIEW A-A

NO SCALE

PROPRIETARY NOTICE

THIS DOCUMENT AND THE TECHNICAL DATA HERE ON DISCLOSED ARE PROPRIETARY TO RACAL DANA INSTRUMENTS INC AND SHALL NOT WITHOUT EX PRESS WRITTEN PERMISSION OF RACAL DANA IN STRUMENTS INC BE USED RELEASED OR DISCLOSED IN WHOLE OR IN PART OR USED TO SOLICIT QUOTA TIONS FROM A COMPETITIVE SOURCE OR USED FOR MANUFACTURE BY ANYONE OTHER THAN RACAL DANA INSTRUMENTS INC THE INFORMATION HERE ON HAS BEEN DEVELOPED AT PRIVATE EXPENSE AND MAY ONLY BE USED FOR PURPOSES OF ENGI NEERING EVALUATION AND FOR INCORPORATION INTO TECHNICAL SPECIFICATIONS AND OTHER DOC UMENTS WHICH SPECIFY PROCUREMENT OF PRO DUCTS FROM RACAL DANA INSTRUMENTS INC

△3 TYPE PERTINENT DATA ON ITEM 11. ATTACH ITEM 11 WHERE SHOWN.

2. ITEM 2 AND 7 TO BE SHIPPED WITH PROBE ASSY.

1. ASSEMBLE PER RACAL-DANA WORKMANSHIP STANDARDS.

NOTES: UNLESS OTHERWISE SPECIFIED

PROBE ASSY, WORD GEN

SIZE	CODE IDENT NO	DWG NO.	REV
D	21793	404222	A

SCALE NONE SHEET 1 OF 2

10-63

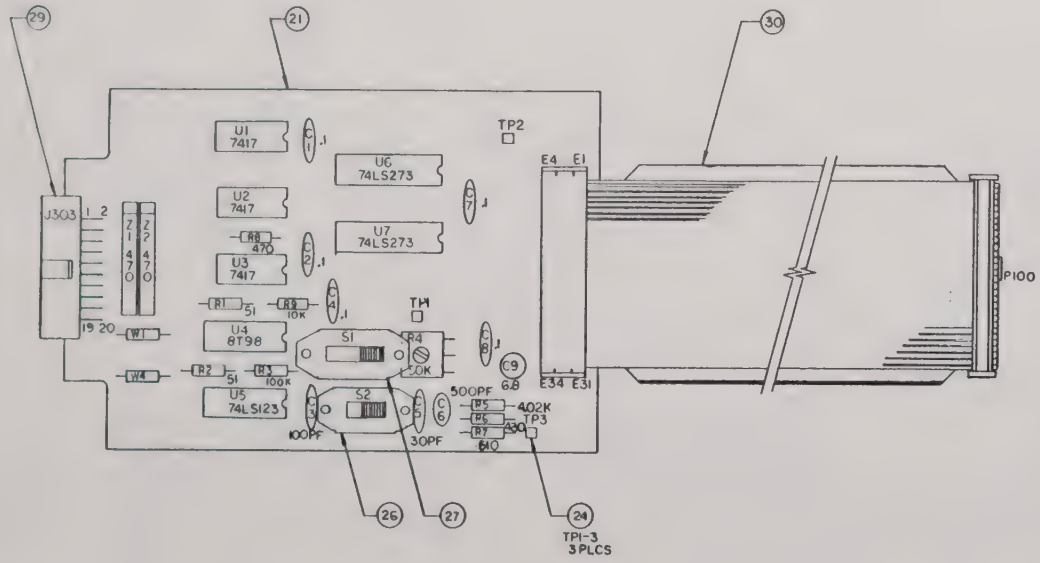

4. SCHEMATIC REFERENCE 431675.
3. CAPACITORS ARE IN UF.
2. RESISTORS ARE IN OHMS.
1. ASSEMBLY PROCESSES & PROCEDURES TO CONFORM TO RACAL-DANA WORKMANSHIP STANDARD.

NOTES: UNLESS OTHERWISE SPECIFIED

PROPRIETARY NOTICE

THIS DOCUMENT AND THE TECHNICAL DATA HERE ON DISCLOSED ARE PROPRIETARY TO RACAL DANA INSTRUMENTS INC AND SHALL NOT WITHOUT EX PRESS WRITTEN PERMISSION OF RACAL DANA IN STRUMENTS INC BE USED, RELEASED OR DISCLOSED IN WHOLE OR IN PART OR USED TO SOLICIT QUOTA TIONS FROM A COMPETITIVE SOURCE OR USED FOR MANUFACTURE BY ANYONE OTHER THAN RACAL DANA INSTRUMENTS INC. THE INFORMATION HERE ON HAS BEEN DEVELOPED AT PRIVATE EXPENSE AND MAY ONLY BE USED FOR PURPOSES OF ENGI NEERING EVALUATION AND FOR INCORPORATION INTO TECHNICAL SPECIFICATIONS AND OTHER DOC UMENTS WHICH SPECIFY PROCUREMENT OF PRO DUCTS FROM RACAL DANA INSTRUMENTS INC

PCB ASSY WORD
GEN PROBE

SIZE	CODE IDENT NO	DWG NO	REV
D	21793	401675	C

SCALE 2/1 SHEET 1 OF 3

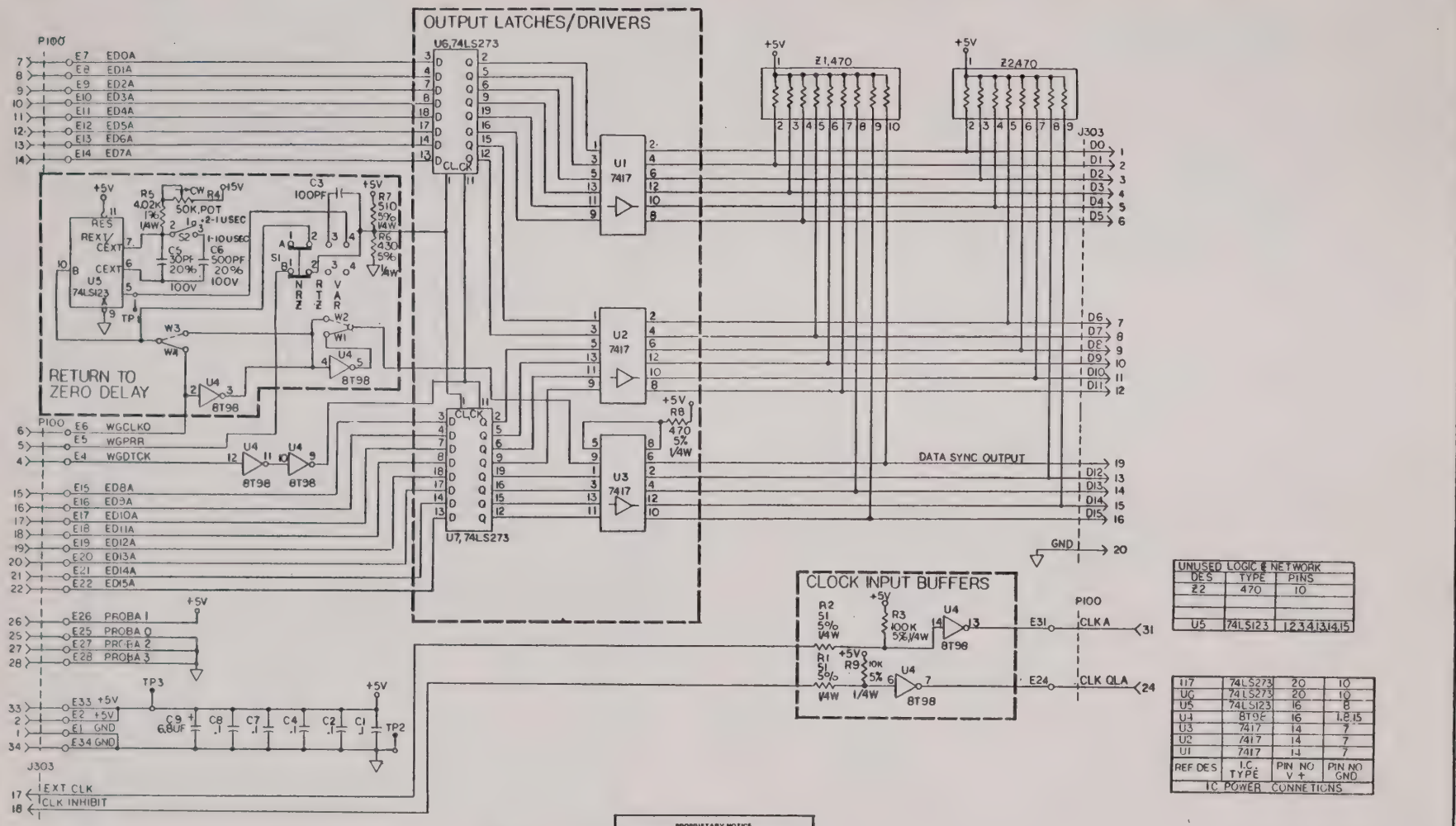

2. RESISTOR VALUES ARE IN OHMS
1. CAPACITOR VALUES ARE IN MICROFARADS, ±20%, 25VOLTS, (C1,C2,C4,C7,C8)

NOTES: UNLESS OTHERWISE SPECIFIED

10-65

10-66

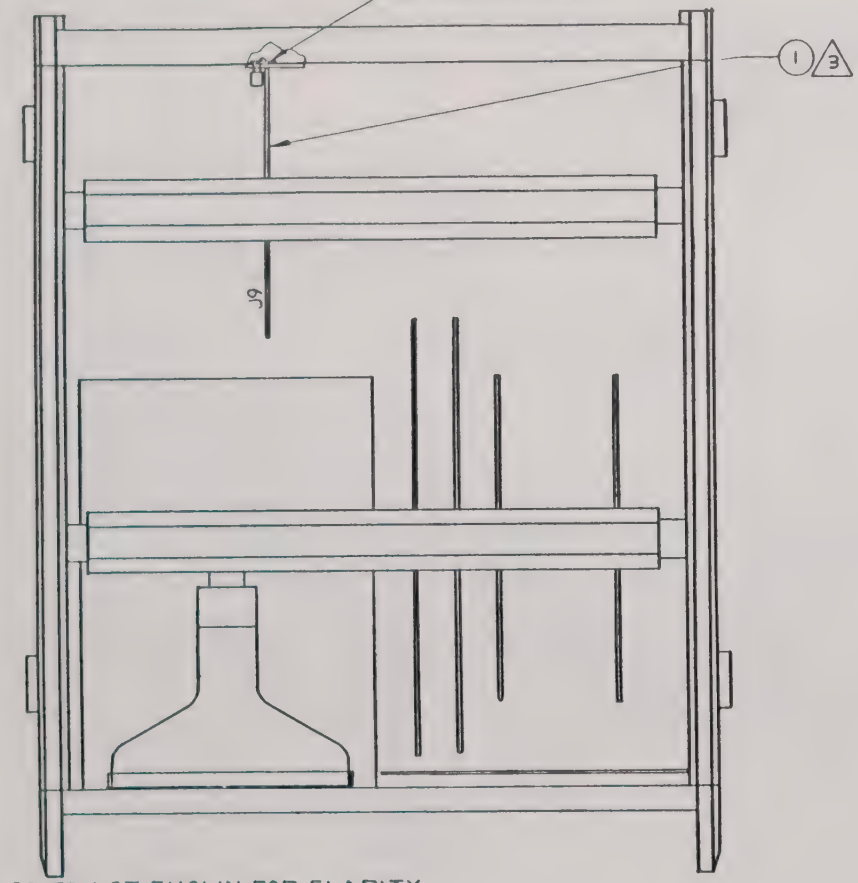

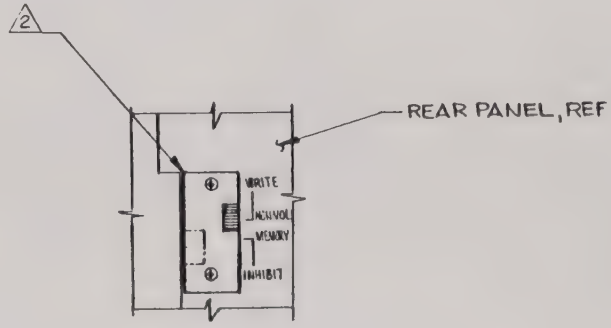

VIEW "A"

4. COVER NOT SHOWN FOR CLARITY

3 TO FACILITATE INSTALLATION OF NON-VOL PCB ASSY, REMOVE TWO TRANSFORMER SIDE PANEL MOUNTING SCREWS AND BACK OUT FOUR REAR PANEL SECURING SCREWS TO ALLOW DIRECTED ENTRY OF PCB. SECURE REAR PANEL MAKING SURE TONGUE IN NON-VOL PCB LOCATES PROPERLY IN REAR PANEL SLOT. REINSTALL TRANSFORMER SCREWS

2 REMOVE BUTCH PLATE. INSTALL NON VOL OPTION. SEE NOTE 3 ROTATE BUTCH PLATE 180°. POSITION AND SECURE BUTCH PLATE SO THAT SWITCH ACTUATOR IS LOCKED IN THE WRITE (UP) POSITION.

1. ASSEMBLE PER RACAL-DANA WORKMANSHIP STANDARDS.

NON VOL ASSY, OPT. 50

SIZE	CODE IDENT NO	DWG NO	REV
C	01702	404229	A

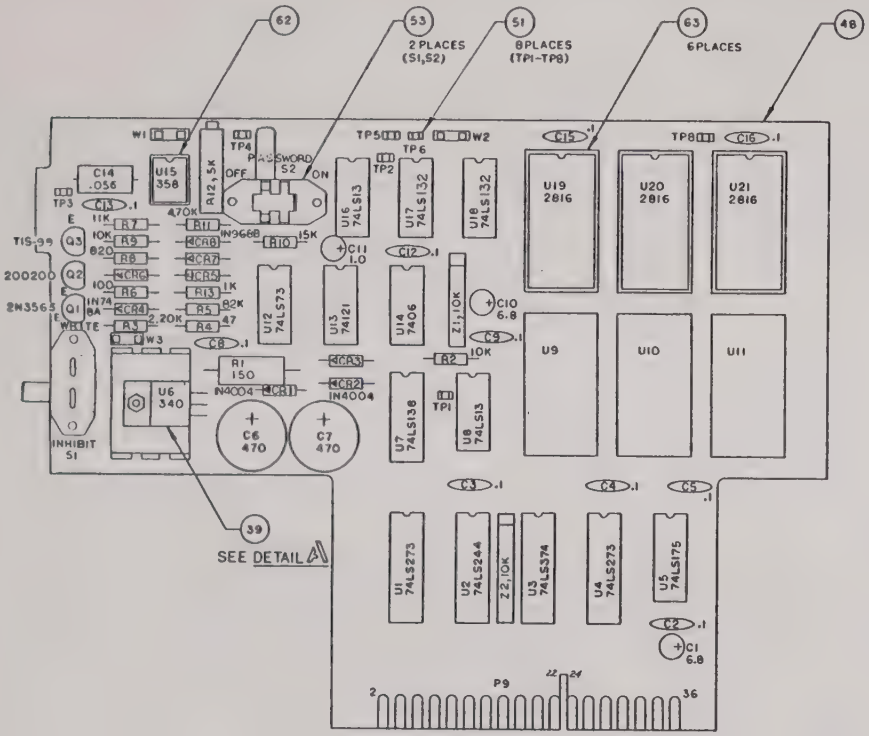

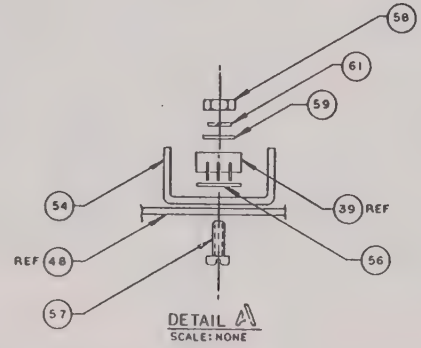

5. CR3,5,6,+7 ARE IN9168.
4. CAPACITOR ARE IN UF.
3. RESISTORS ARE IN OHMS.
2. REFERENCE SCHEMATIC NO. 431684.
1. ASSEMBLY PROCESSES + PROCEDURES TO CONFORM TO RACAL-DANA WORKMANSHIP STANDARD.

NOTES: UNLESS OTHERWISE SPECIFIED

PROPRIETARY NOTICE

THIS DOCUMENT AND THE TECHNICAL DATA HERE ON DISCLOSED, ARE PROPRIETARY TO RACAL DANA INSTRUMENTS INC AND SHALL NOT, WITHOUT EX PRESS WRITTEN PERMISSION OF RACAL DANA IN STRUMENTS INC BE USED, RELEASED OR DISCLOSED IN WHOLE OR IN PART, OR USED TO SOLICIT QUOTA TIONS FROM A COMPETITIVE SOURCE OR USED FOR MANUFACTURE BY ANYONE OTHER THAN RACAL DANA INSTRUMENTS INC THE INFORMATION HERE ON HAS BEEN DEVELOPED AT PRIVATE EXPENSE, AND MAY ONLY BE USED FOR PURPOSES OF ENGI NEERING EVALUATION AND FOR INCORPORATION INTO TECHNICAL SPECIFICATIONS AND OTHER DOC UMENTS WHICH SPECIFY PROCUREMENT OF PRO DUCTS FROM RACAL DANA INSTRUMENTS INC

PCB ASSY,NON-VOL

SIZE	CODE IDENT NO	DWG NO.	REV
D	21793	401684	H

SCALE 2/1 SHEET 1 OF 5

10-67

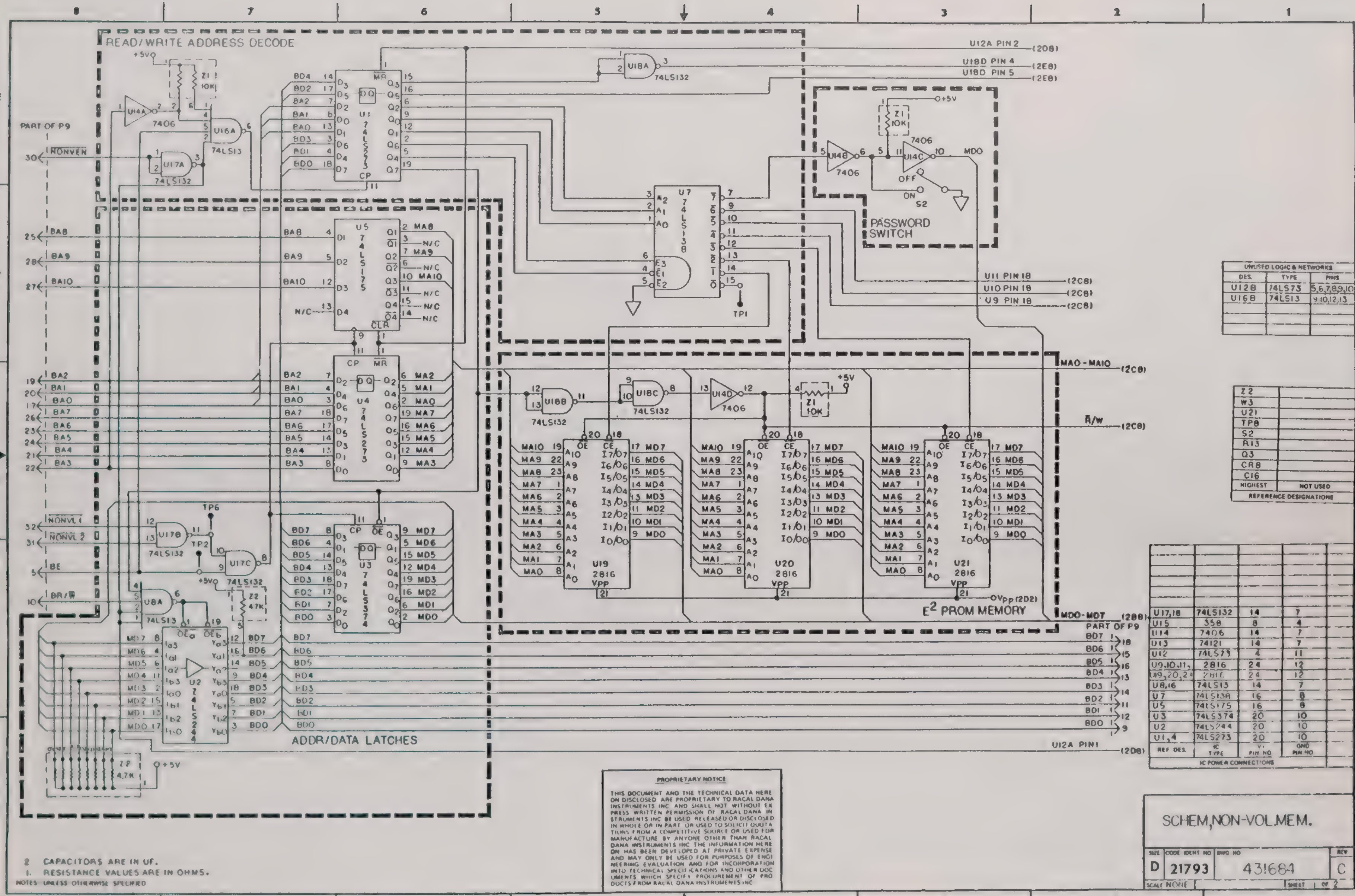
READ/WRITE ADDRESS DECODE
ADDR/DATA LATCHES
PASSWORD SWITCH
E² PROM MEMORY
PART OF P9
MAO-MA10
MDO-MD7
U12A PIN 2
U18D PIN 4
U18D PIN 5
U11 PIN 18
U10 PIN 18
U9 PIN 18
UNUSED LOGIC & NETWORKS
REFERENCE DESIGNATIONS
IC POWER CONNECTIONS
2. CAPACITORS ARE IN UF.
1. RESISTANCE VALUES ARE IN OHMS.
NOTES: UNLESS OTHERWISE SPECIFIED
PROPRIETARY NOTICE
THIS DOCUMENT AND THE TECHNICAL DATA HEREON DISCLOSED ARE PROPRIETARY TO RACAL DANA INSTRUMENTS INC AND SHALL NOT WITHOUT EXPRESS WRITTEN PERMISSION OF RACAL DANA INSTRUMENTS INC BE USED RELEASED OR DISCLOSED IN WHOLE OR IN PART OR USED TO SOLICIT QUOTATIONS FROM A COMPETITIVE SOURCE OR USED FOR MANUFACTURE BY ANYONE OTHER THAN RACAL DANA INSTRUMENTS INC. THE INFORMATION HEREON HAS BEEN DEVELOPED AT PRIVATE EXPENSE AND MAY ONLY BE USED FOR PURPOSES OF ENGINEERING EVALUATION AND FOR INCORPORATION INTO TECHNICAL SPECIFICATIONS AND OTHER DOCUMENTS WHICH SPECIFY PROCUREMENT OF PRODUCTS FROM RACAL DANA INSTRUMENTS INC
SCHEM,NON-VOL.MEM.
D 21793 431684 C
SCALE NONE
SHEET 1 OF 2

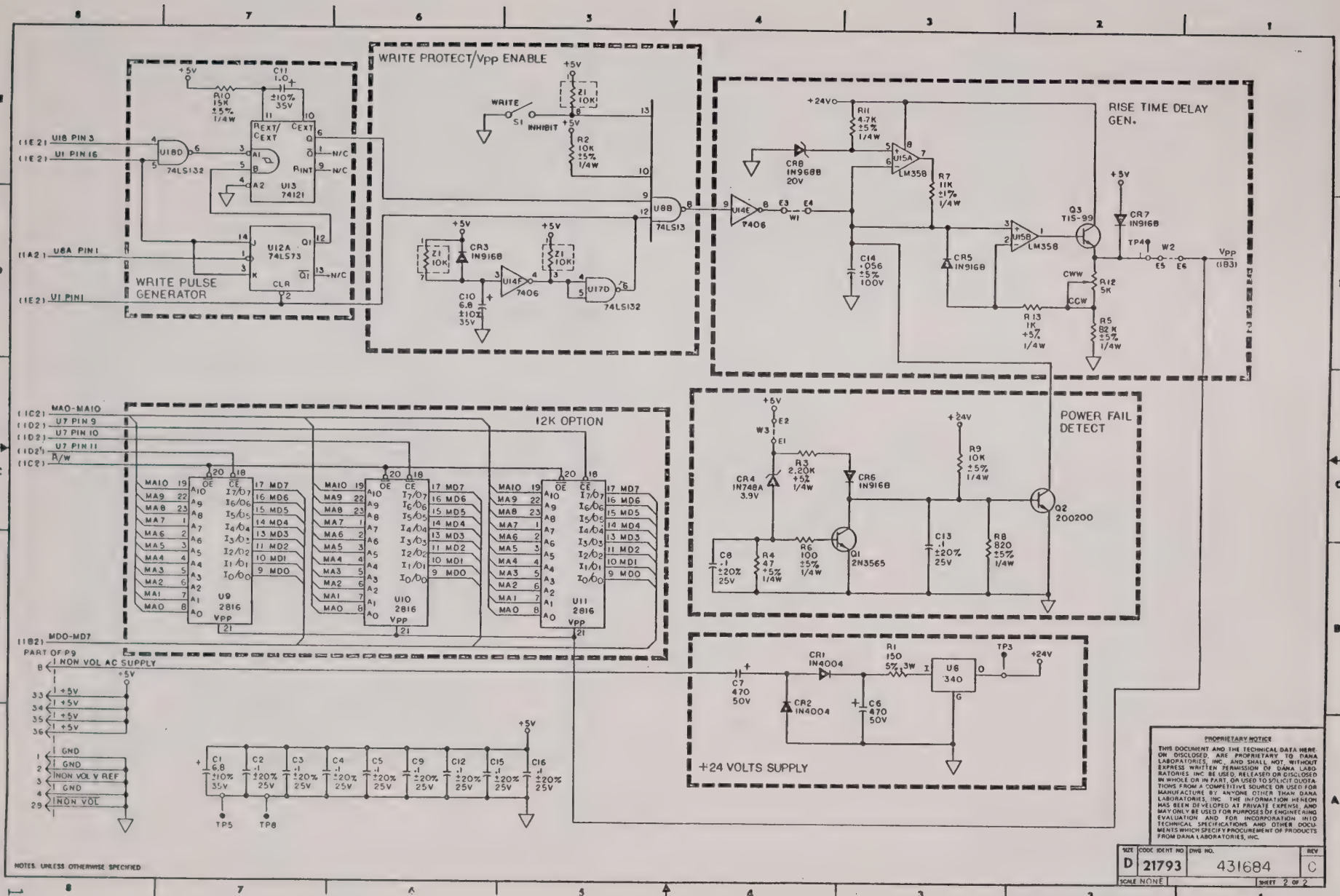

PROPRIETARY NOTICE

THIS DOCUMENT AND THE TECHNICAL DATA HERE ON DISCLOSED, ARE PROPRIETARY TO DANA LABORATORIES, INC. AND SHALL NOT, WITHOUT EXPRESS WRITTEN PERMISSION OF DANA LABORATORIES INC. BE USED, RELEASED OR DISCLOSED IN WHOLE OR IN PART, OR USED TO SOLICIT QUOTATIONS FROM A COMPETITIVE SOURCE OR USED FOR MANUFACTURE BY ANYONE OTHER THAN DANA LABORATORIES, INC. THE INFORMATION HEREON HAS BEEN DEVELOPED AT PRIVATE EXPENSE, AND MAY ONLY BE USED FOR PURPOSES OF ENGINEERING EVALUATION AND FOR INCORPORATION INTO TECHNICAL SPECIFICATIONS AND OTHER DOCUMENTS WHICH SPECIFY PROCUREMENT OF PRODUCTS FROM DANA LABORATORIES, INC.

SIZE	CODE IDENT NO	DWG NO.	REV
D	21793	431684	C

SCALE NONE SHEET 2 OF 2

10-69

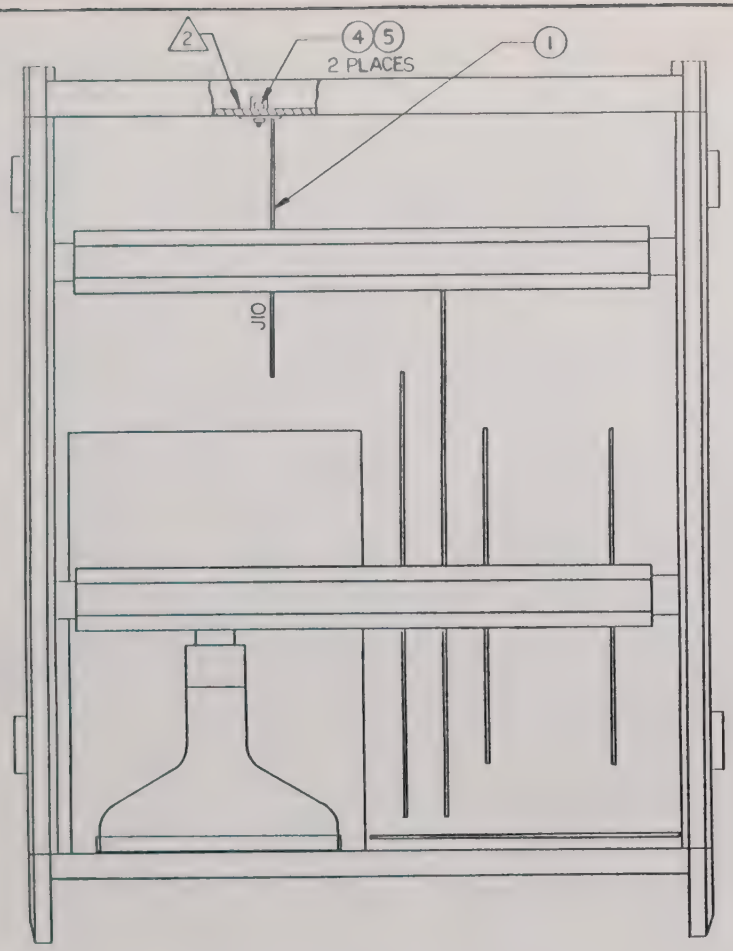

COVER NOT SHOWN FOR CLARITY

2 REMOVE BUTCH PLATE 454566 (ITEM 17) AND MOUNTING SCREWS 610910 (ITEM 18) BEFORE INSTALLING PCB ASSY GPIB INTERFACE 401666 (ITEM 1).

1. ASSEMBLE PER RACAL-DANA WORKMANSHIP STANDARDS.

NOTES: UNLESS OTHERWISE SPECIFIED

GPIB INTFC ASSY, OPT. 55

SIZE	CODE IDENT NO	DWG NO	REV
C	21793	404300	A

SCALE NONE SHEET 1 OF 2

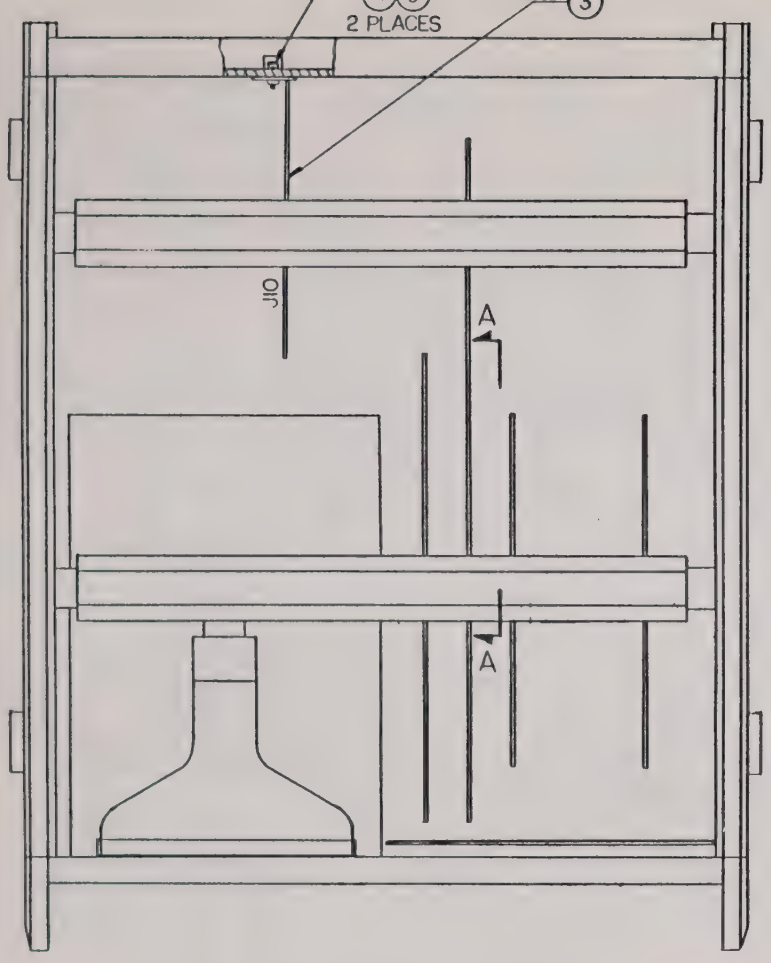

COVER NOT SHOWN FOR CLARITY

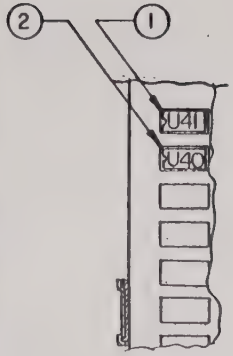

SECTION A-A
OF 401661

NOTES: UNLESS OTHERWISE SPECIFIED

1. ASSEMBLE PER RACAL-DANA WORKMANSHIP STANDARDS.

GPIB INTFC ASSY, OPT. 55			
SIZE	CODE IDENT NO.	DWG NO.	REV
C	21793	404226	B
SCALE NONE		SHEET	OF 2

10-71

10-72

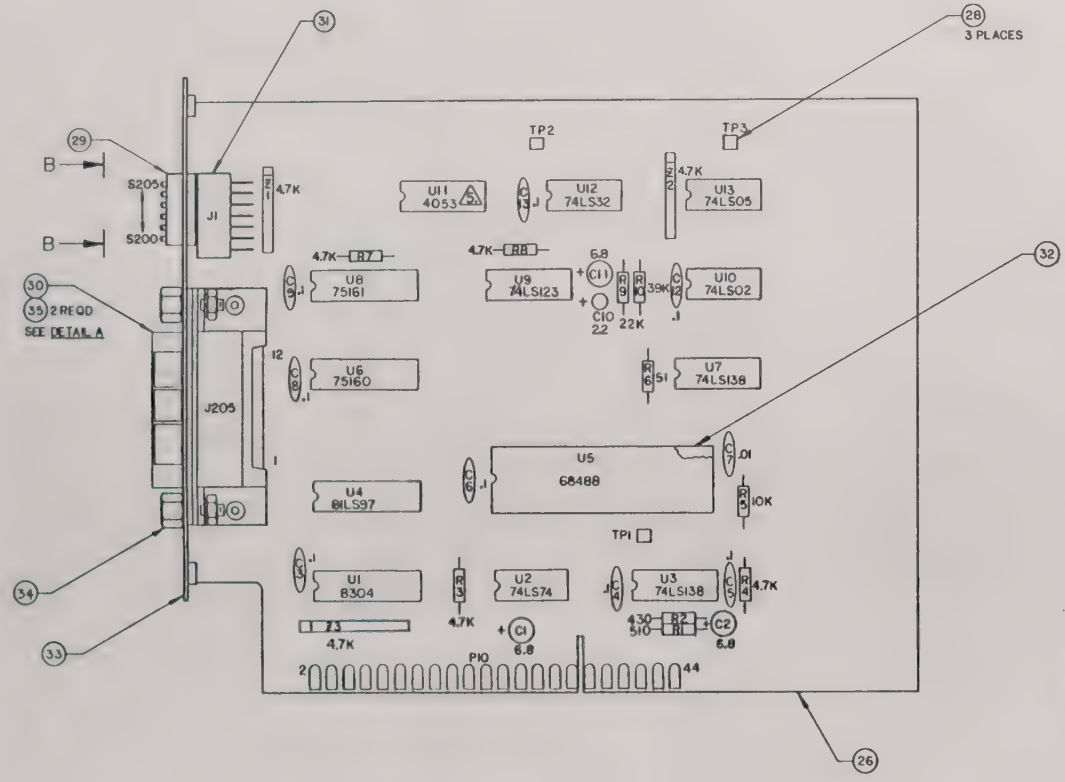

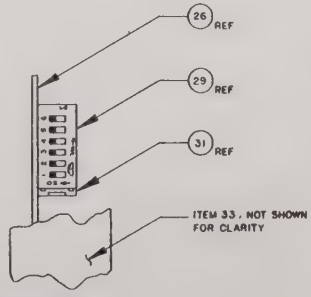

VIEW BB
SCALE: NONE

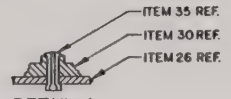

DETAIL A
SCALE: 2/1

⚠ WARNING: STATIC SENSITIVE DEVICE.

4. CAPACITORS ARE IN UF.
3. RESISTORS ARE IN OHMS
2. REFERENCE SCHEMATIC NO 431666.
1. ASSEMBLY PROCESSES& PROCEDURES TO CONFORM TO RACAL-DANA WORKMANSHIP STANDARD.

NOTES: UNLESS OTHERWISE SPECIFIED

PROPRIETARY NOTICE

THIS DOCUMENT AND THE TECHNICAL DATA HERE ON DISCLOSED ARE PROPRIETARY TO RACAL DANA INSTRUMENTS INC AND SHALL NOT WITHOUT EX PRESS WRITTEN PERMISSION OF RACAL DANA IN STRUMENTS INC BE USED RELEASED OR DISCLOSED IN WHOLE OR IN PART OR USED TO SOLICIT QUOTA TIONS FROM A COMPETITIVE SOURCE OR USED FOR MANUFACTURE BY ANYONE OTHER THAN RACAL DANA INSTRUMENTS INC THE INFORMATION HERE ON HAS BEEN DEVELOPED AT PRIVATE EXPENSE AND MAY ONLY BE USED FOR PURPOSES OF ENGI NEERING EVALUATION AND FOR INCORPORATION INTO TECHNICAL SPECIFICATIONS AND OTHER DOC UMENTS WHICH SPECIFY PROCUREMENT OF PRO DUCTS FROM RACAL DANA INSTRUMENTS INC

PCB ASSY, GPIB INTFC

SIZE	CODE IDENT NO	DWG NO	REV
D	21793	401666	C

SCALE NONE SHEET OF 3

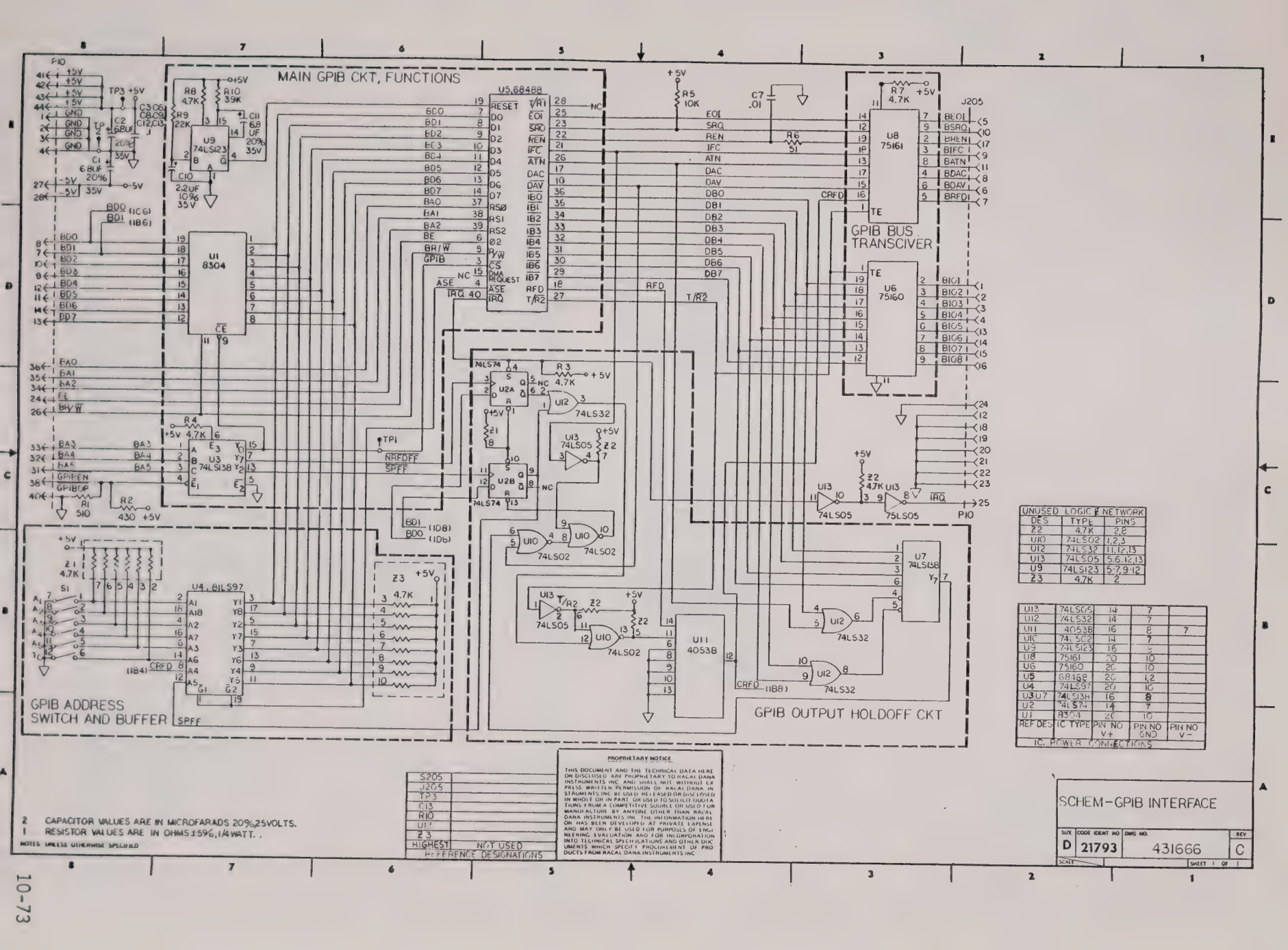

UNUSED LOGIC NETWORK		
DES	TYPE	PINS
Z2	4.7K	2,8
U10	74LS02	1,2,3
U12	74LS32	11,12,13
U13	74LS05	5,6,12,13
U9	74LS123	5-7,9-12
Z3	4.7K	2

U13	74LS05	14	7	
U12	74LS32	14	7	
U11	4053B	16	8	7
U10	74LS02	14	7	
U9	74LS123	16	8	
U8	75161	20	10	
U6	75160	20	10	
U5	68488	28	14	
U4	74LS97	20	10	
U3 U7	74LS138	16	8	
U2	*4LS74	14	7	
U1	8304	40	20	
REF DES	IC TYPE	PIN NO V+	PIN NO GND	PIN NO V-

IC POWER CONNECTIONS

S205
J205
TP3
C13
R10
U1'
Z3
HIGHEST NOT USED

REFERENCE DESIGNATIONS

PROPRIETARY NOTICE

THIS DOCUMENT AND THE TECHNICAL DATA HERE ON DISCLOSED ARE PROPRIETARY TO RACAL DANA INSTRUMENTS INC AND SHALL NOT WITHOUT EXPRESS WRITTEN PERMISSION OF RACAL DANA INSTRUMENTS INC BE USED RELEASED OR DISCLOSED IN WHOLE OR IN PART OR USED TO SOLICIT QUOTATIONS FROM A COMPETITIVE SOURCE OR USED FOR MANUFACTURE BY ANYONE OTHER THAN RACAL DANA INSTRUMENTS INC. THE INFORMATION HERE ON HAS BEEN DEVELOPED AT PRIVATE EXPENSE AND MAY ONLY BE USED FOR PURPOSES OF ENGINEERING EVALUATION AND FOR INCORPORATION INTO TECHNICAL SPECIFICATIONS AND OTHER DOCUMENTS WHICH SPECIFY PROCUREMENT OF PRODUCTS FROM RACAL DANA INSTRUMENTS INC

2 CAPACITOR VALUES ARE IN MICROFARADS 20% 25VOLTS.
1 RESISTOR VALUES ARE IN OHMS ±5% 1/4 WATT.

NOTES UNLESS OTHERWISE SPECIFIED

SCHEM-GPIB INTERFACE

SIZE	CODE IDENT NO	DWG NO.	REV
D	21793	431666	C

SCALE — SHEET 1 OF 1

10-73

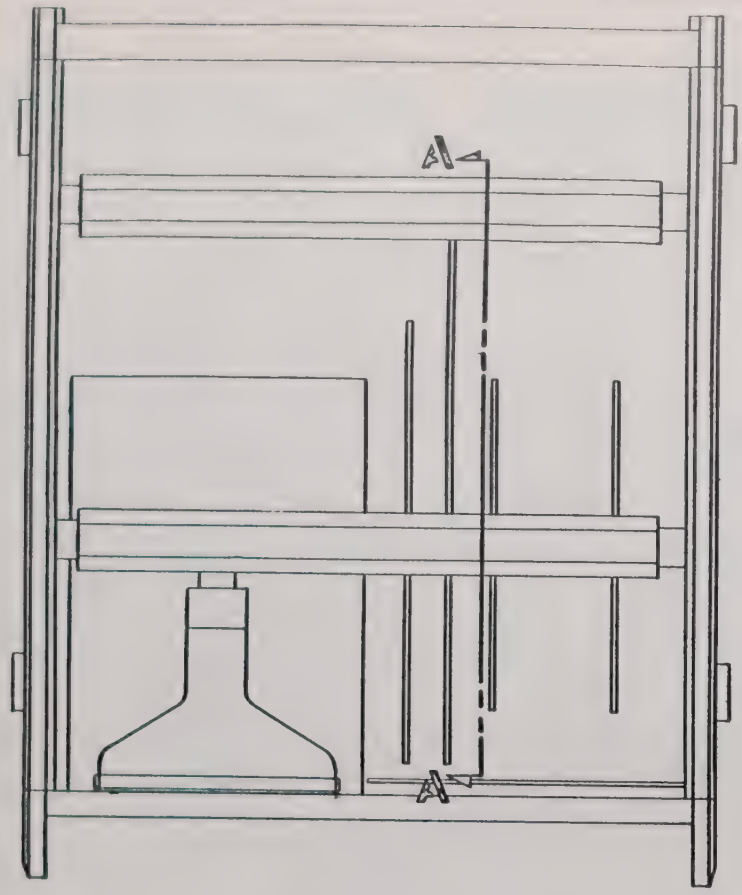

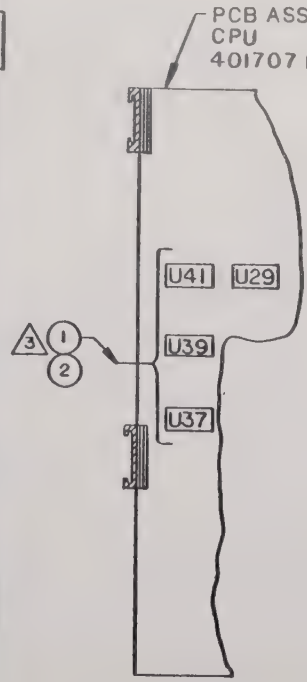

SECTION A-A
SCALE:NONE

COVER NOT SHOWN FOR CLARITY

3. ITEMS 1+2 MAY BE INSTALLED IN ANY AVAILABLE SOCKET OF THOSE SHOWN.
2. ITEMS 4+5 TO BE SHIPPED WITH OPTION ASSY.
1. ASSEMBLE PER RACAL-DANA WORKMANSHIP STANDARDS.

NOTES: UNLESS OTHERWISE SPECIFIED

DED. KIT ASSY, 6802/09,
OPTION 68A

SIZE	CODE IDENT NO.	DWG NO.	REV
C	21793	404299	A

SCALE NONE SHEET 1 OF 2

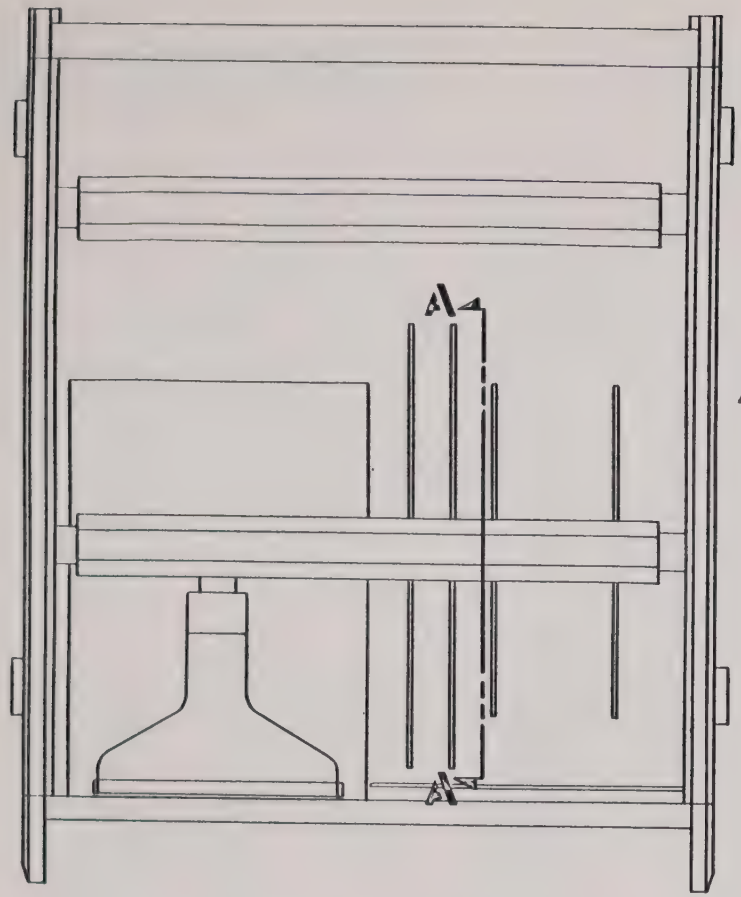

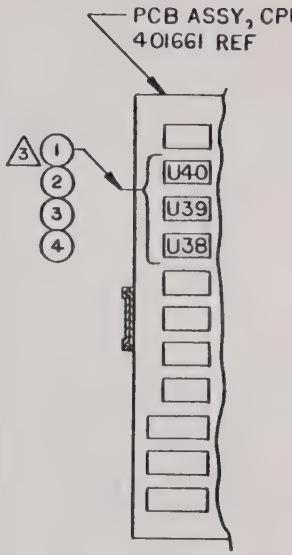

SECTION A-A
SCALE: NONE

COVER NOT SHOWN FOR CLARITY

3 FOR 6800 DISASSEMBLER:
a. INSTALL ITEM 1 IN U40 +
INSTALL ITEM 2 IN U39,
OR
b. INSTALL ITEM 1 IN U39 +
INSTALL ITEM 2 IN U38.

FOR 6809 DISASSEMBLER:
a. INSTALL ITEM 3 IN U40 +
INSTALL ITEM 4 IN U39,
OR
b. INSTALL ITEM 3 IN U39 +
INSTALL ITEM 4 IN U38.

2. ITEM 6+7 TO BE SHIPPED WITH OPTION ASSY.
1. ASSEMBLE PER RACAL-DANA WORKMANSHIP STANDARDS.

NOTES: UNLESS OTHERWISE SPECIFIED

DEDICATED KIT ASSY,
6802/6809, OPT. 68

SIZE	CODE IDENT NO.	DWG NO.	REV
C	21793	404240	A
SCALE NONE		SHEET 1 OF 2	

10-75

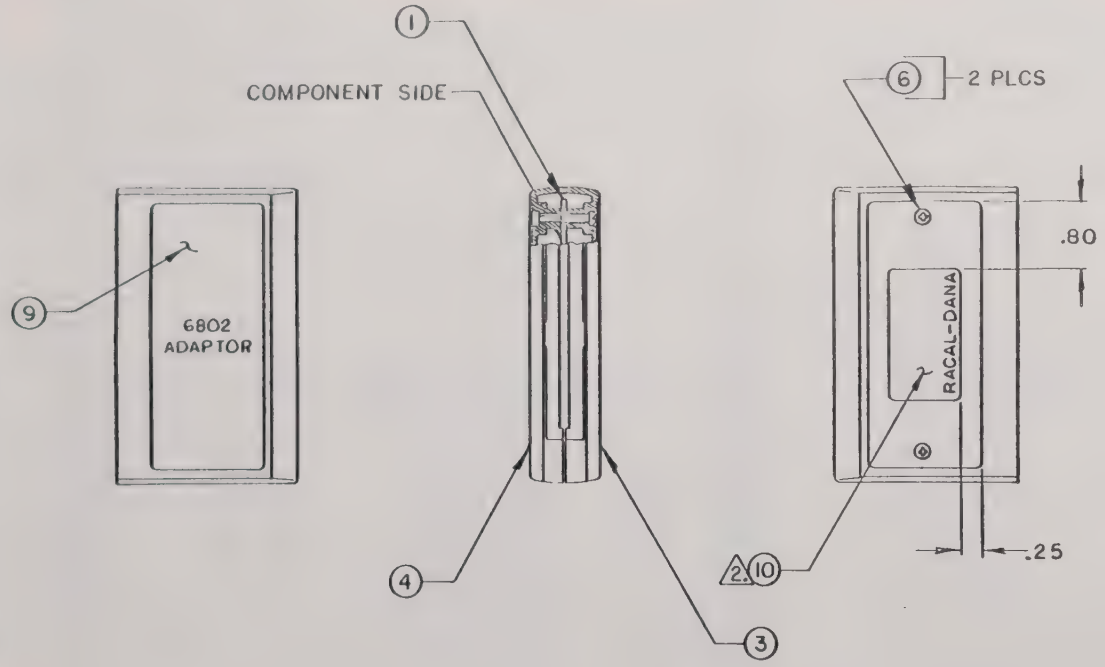

2. TYPE PERTINENT DATA ON ITEM NO. 10, ATTACH ITEM NO. 10 WHERE SHOWN

1. ASSEMBLE PER RACAL-DANA WORKMANSHIP STANDARDS.

NOTES: UNLESS OTHERWISE SPECIFIED

ADAPTOR ASSY, 6802

SIZE	CODE IDENT NO.	DWG NO.	REV
C	21793	404238	A

SCALE 1/1 SHEET 1 OF 2

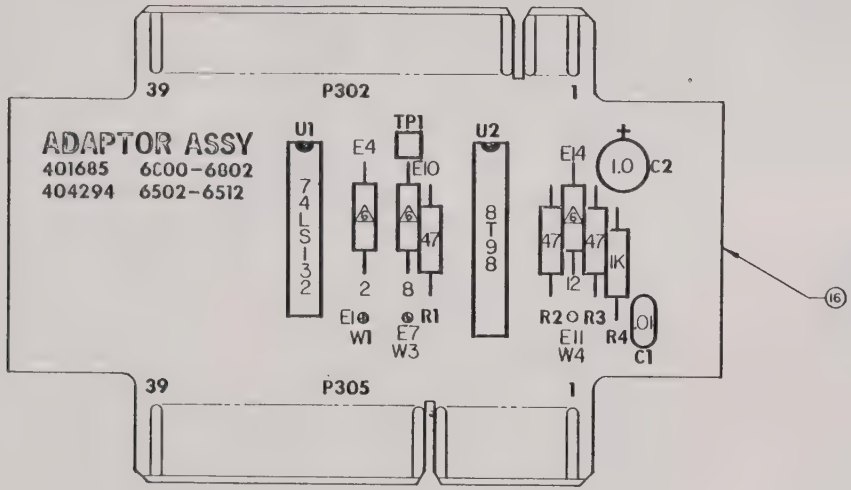

⚠ INSTALL W1,3 AND 4 IN SOLID COMPONENT OUTLINED POSITIONS.
5. NO COMPONENT TO EXCEED .250 ABOVE PC BOARD.
4. CAPACITORS ARE IN UF.
3. RESISTORS ARE IN OHMS.
2. REFERENCE SCHEMATIC NO. 431685.
1. ASSEMBLY PROCESSES AND PROCEDURES TO CONFORM TO RACAL-DANA WORKMANSHIP STANDARDS.

NOTES UNLESS OTHERWISE SPECIFIED

PROPRIETARY NOTICE

THIS DOCUMENT AND THE TECHNICAL DATA HERE ON DISCLOSED, ARE PROPRIETARY TO RACAL DANA INSTRUMENTS INC AND SHALL NOT WITHOUT EX PRESS WRITTEN PERMISSION OF RACAL DANA IN STRUMENTS INC BE USED RELEASED OR DISCLOSED IN WHOLE OR IN PART OR USED TO SOLICIT QUOTA TIONS FROM A COMPETITIVE SOURCE OR USED FOR MANUFACTURE BY ANYONE OTHER THAN RACAL DANA INSTRUMENTS INC THE INFORMATION HERE ON HAS BEEN DEVELOPED AT PRIVATE EXPENSE AND MAY ONLY BE USED FOR PURPOSES OF ENGI NEERING EVALUATION AND FOR INCORPORATION INTO TECHNICAL SPECIFICATIONS AND OTHER DOC UMENTS WHICH SPECIFY PROCUREMENT OF PRO DUCTS FROM RACAL DANA INSTRUMENTS INC

PCB ASSY/6800-6802
ADAPTOR

SIZE	CODE IDENT NO	DWG NO.	REV
D	21793	401685	A

SCALE 4/1 SHEET 1 OF 2

10-77

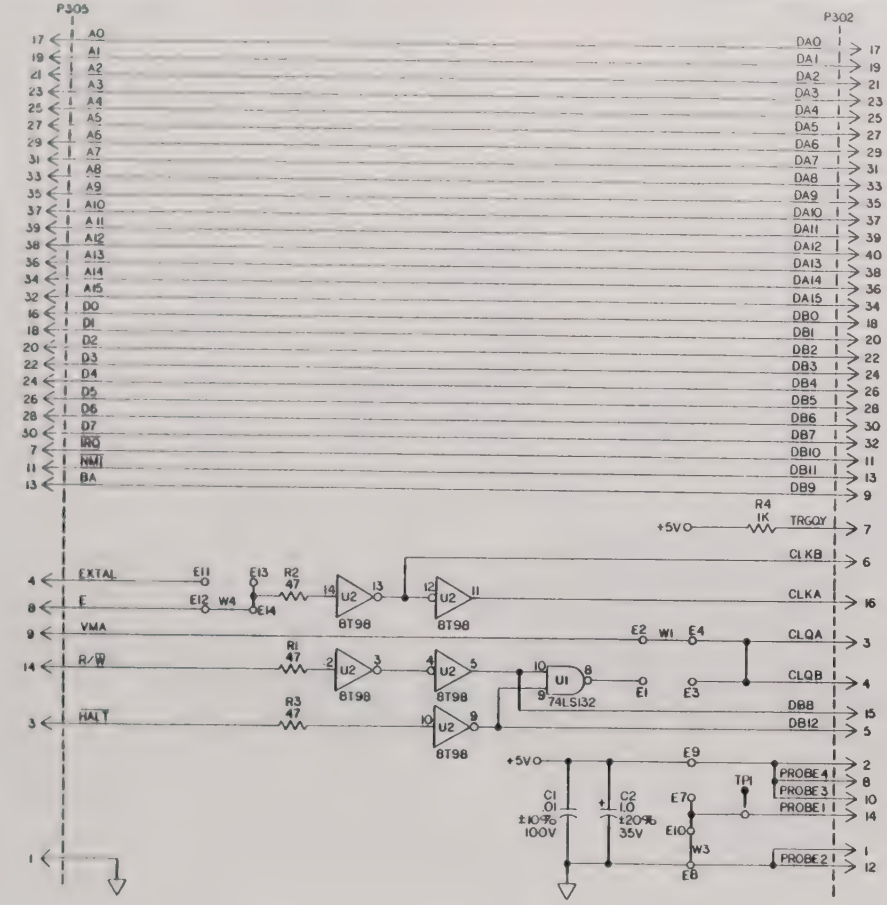

UNUSED LOGIC & NETWORKS		
DES.	TYPE	PINS
U1	74LS132	1,2,3
U1	74LS132	4,5,6
U1	74LS132	11,12,13
U2	8T98	6,7

W4	W2
U2	
TP1	
R4	
P305	
E14	E5,6
C2	
HIGHEST	NOT USED

REFERENCE DESIGNATIONS

REF. DES.	IC TYPE	+5V PIN NO.	GND PIN NO.
U2	8T98	16	8
U1	74LS132	14	7

IC POWER CONNECTIONS

1 ALL RESISTORS ARE IN OHMS, ±5%, 1/4 WATT.

NOTES: UNLESS OTHERWISE SPECIFIED

PROPRIETARY NOTICE

THIS DOCUMENT AND THE TECHNICAL DATA HERE ON DISCLOSED ARE PROPRIETARY TO RACAL DANA INSTRUMENTS INC AND SHALL NOT WITHOUT EXPRESS WRITTEN PERMISSION OF RACAL DANA INSTRUMENTS INC BE USED RELEASED OR DISCLOSED IN WHOLE OR IN PART OR USED TO SOLICIT QUOTATIONS FROM A COMPETITIVE SOURCE OR USED FOR MANUFACTURE BY ANYONE OTHER THAN RACAL DANA INSTRUMENTS INC THE INFORMATION HERE ON HAS BEEN DEVELOPED AT PRIVATE EXPENSE AND MAY ONLY BE USED FOR PURPOSES OF ENGINEERING EVALUATION AND FOR INCORPORATION INTO TECHNICAL SPECIFICATIONS AND OTHER DOCUMENTS WHICH SPECIFY PROCUREMENT OF PRODUCTS FROM RACAL DANA INSTRUMENTS INC

SCHEM, 6800-6802 ADAPTOR

SIZE	CODE IDENT NO.	DWG NO.	REV
D	21793	431685	A

SCALE NONE SHEET OF

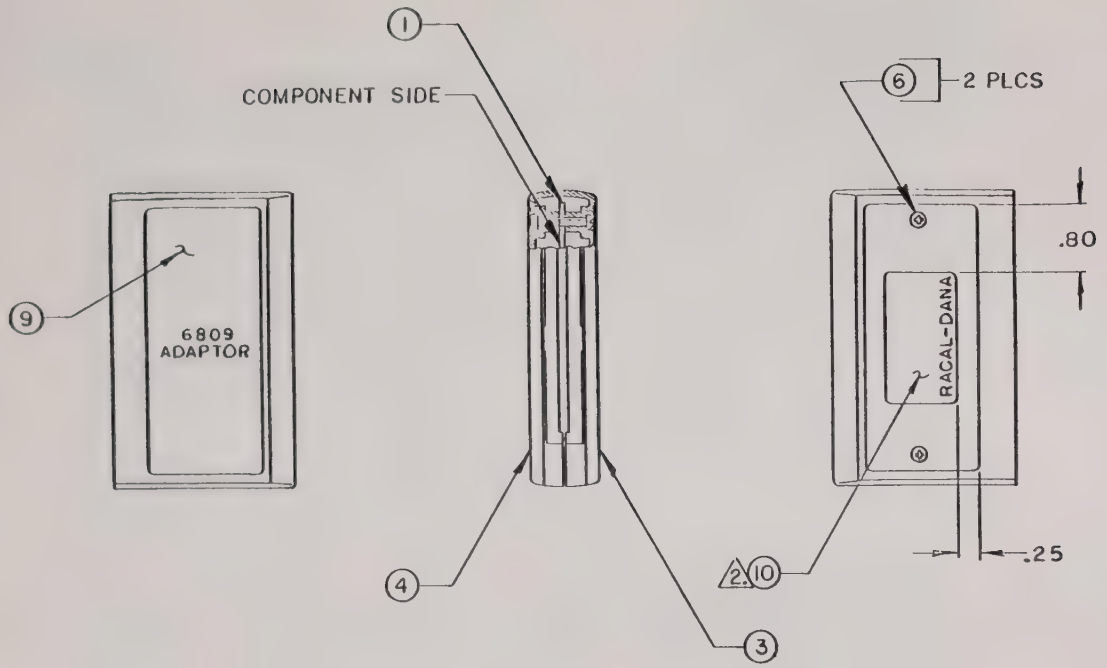

2. TYPE PERTINENT DATA ON ITEM NO. 10, ATTACH ITEM NO.10 WHERE SHOWN

1. ASSEMBLE PER RACAL-DANA WORKMANSHIP STANDARDS.

NOTES. UNLESS OTHERWISE SPECIFIED

ADAPTOR ASSY, 6809

SIZE	CODE IDENT NO.	DWG NO.	REV
C	21793	404239	A

SCALE 1/1 SHEET 1 OF 2

10-79

10-80

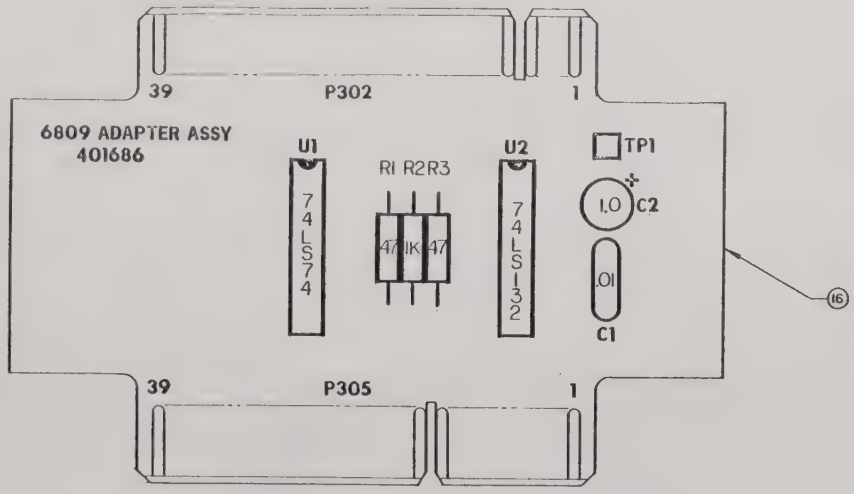

5. NO COMPONENT TO EXCEED .250 ABOVE PC BOARD.
4. CAPACITORS ARE IN UF.
3. RESISTORS ARE IN OHMS.
2. REFERENCE SCHEMATIC NO. 431686
1. ASSEMBLY PROCESSES AND PROCEDURES TO CONFORM TO RACAL-DANA WORKMANSHIP STANDARDS.

NOTES: UNLESS OTHERWISE SPECIFIED

PROPRIETARY NOTICE

THIS DOCUMENT AND THE TECHNICAL DATA HERE ON DISCLOSED ARE PROPRIETARY TO RACAL DANA INSTRUMENTS INC AND SHALL NOT WITHOUT EX PRESS WRITTEN PERMISSION OF RACAL DANA IN STRUMENTS INC BE USED RELEASED OR DISCLOSED IN WHOLE OR IN PART OR USED TO SOLICIT QUOTA TIONS FROM A COMPETITIVE SOURCE OR USED FOR MANUFACTURE BY ANYONE OTHER THAN RACAL DANA INSTRUMENTS INC THE INFORMATION HERE ON HAS BEEN DEVELOPED AT PRIVATE EXPENSE AND MAY ONLY BE USED FOR PURPOSES OF ENGI NEERING EVALUATION AND FOR INCORPORATION INTO TECHNICAL SPECIFICATIONS AND OTHER DOC UMENTS WHICH SPECIFY PROCUREMENT OF PRO DUCTS FROM RACAL DANA INSTRUMENTS INC

PCB ASSY/6809 ADPTR

SIZE	CODE IDENT NO	DWG NO	REV
D	21793	401686	A

SCALE 4/1 SHEET 1 OF 2

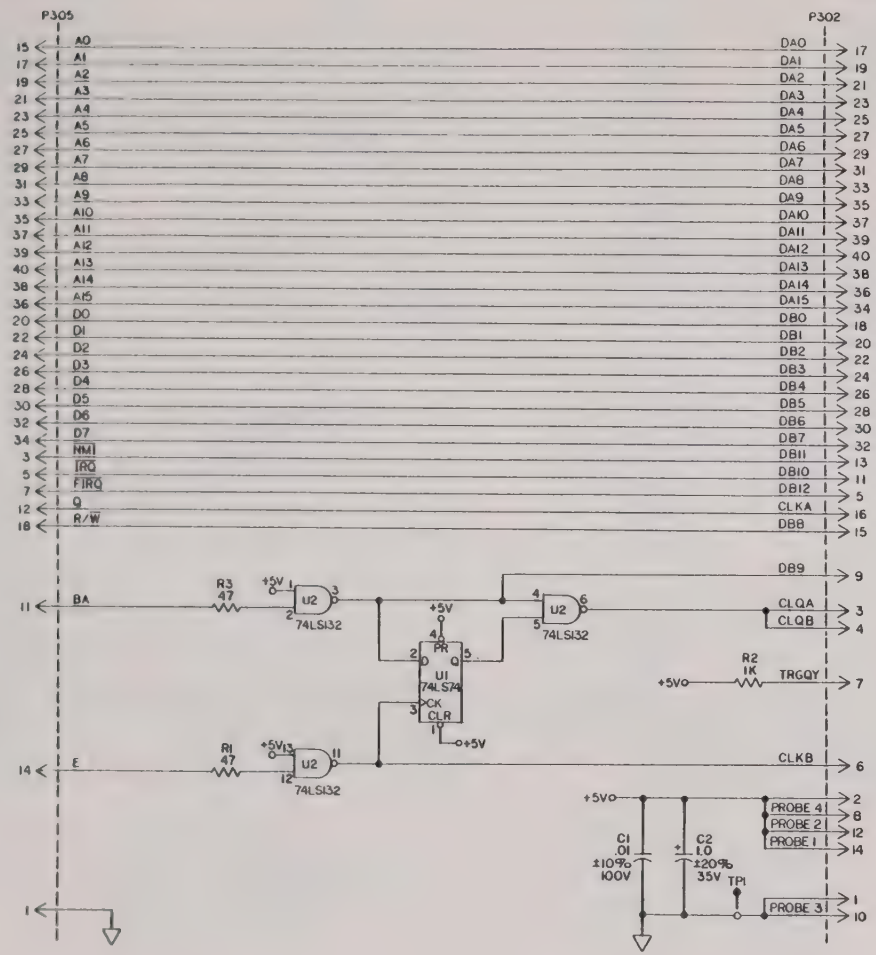

UNUSED LOGIC & NETWORKS		
DES.	TYPE	PINS
U1	74LS74	8,9,10,11,
		12,13
U2	74LS132	8,9,10

U2	
TP1	
R3	
P305	
C2	
HIGHEST	NOT USED
REFERENCE DESIGNATIONS	

U2	74LS132	14	7
U1	74LS74	14	7
REF DES.	IC TYPE	5V+ PIN NO	GND PIN NO
IC POWER CONNECTIONS			

1. ALL RESISTORS ARE IN OHMS, ±5%, 1/4 WATT.

NOTES UNLESS OTHERWISE SPECIFIED

PROPRIETARY NOTICE

THIS DOCUMENT AND THE TECHNICAL DATA HERE ON DISCLOSED ARE PROPRIETARY TO RACAL DANA INSTRUMENTS INC AND SHALL NOT WITHOUT EX PRESS WRITTEN PERMISSION OF RACAL DANA IN STRUMENTS INC BE USED, RELEASED OR DISCLOSED IN WHOLE OR IN PART, OR USED TO SOLICIT DUPLICATIONS FROM A COMPETITIVE SOURCE OR USED FOR MANUFACTURE BY ANYONE OTHER THAN RACAL DANA INSTRUMENTS INC THE INFORMATION HERE ON HAS BEEN DEVELOPED AT PRIVATE EXPENSE AND MAY ONLY BE USED FOR PURPOSES OF ENGINEERING EVALUATION AND FOR INCORPORATION INTO TECHNICAL SPECIFICATIONS AND OTHER DOCUMENTS WHICH SPECIFY PROCUREMENT OF PRODUCTS FROM RACAL DANA INSTRUMENTS INC

SCHEM/6809 ADAPTOR

SIZE	CODE IDENT NO	DWG NO.	REV
D	21793	431686	A

SCALE NONE SHEET OF

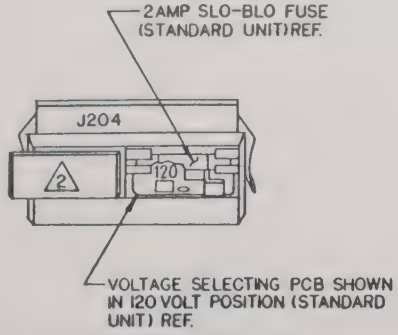

120V (STANDARD UNIT) REF.

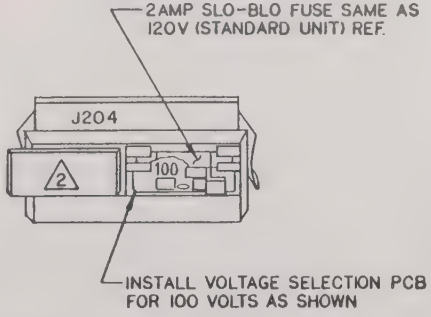

100V OPTION ASSY

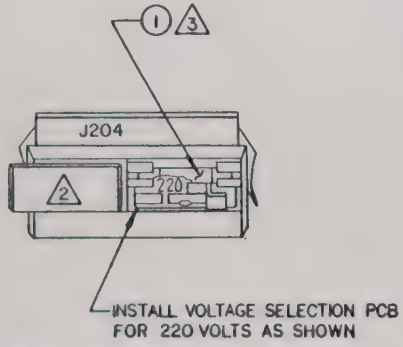

220V OPTION ASSY

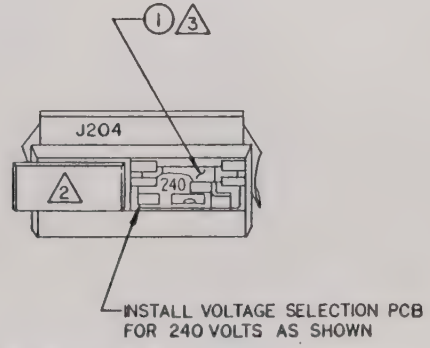

240V OPTION ASSY

4. SERIAL NUMBER LABEL SHOULD BE MARKED AS REQUIRED TO SUIT SPECIFIC OPTION TO INDICATE CORRECT VOLTAGE.

3 REMOVE AND RETURN STANDARD FUSE TO STOCK.

2 FUSE AND PCB ACCESS COVER SHOWN IN OPEN POSITION.

1. ASSEMBLY PROCESSES AND PROCEDURES TO CONFORM TO RACAL-DANA WORKMANSHIP STANDARD.

NOTES: UNLESS OTHERWISE SPECIFIED

OPTION 71 ASSY/VOLTS

SIZE	CODE IDENT NO	DWG NO	REV
C	21793	404232	A

SCALE NONE SHEET OF 2

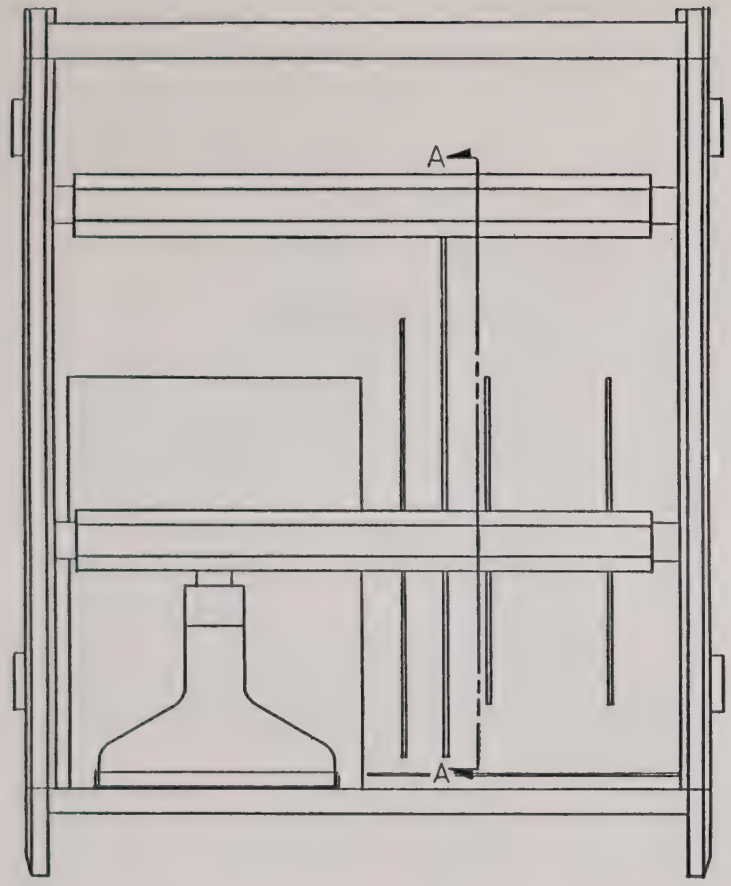

COVER NOT SHOWN FOR CLARITY

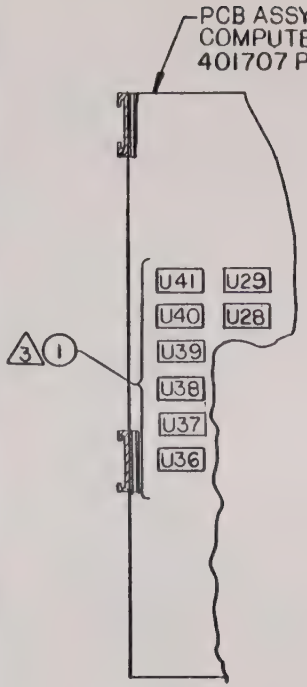

SECTION A-A
NO SCALE

3. ITEM 1 MAY BE INSTALLED IN ANY AVAILABLE SOCKET OF THOSE SHOWN.

2. ITEM 3 (4 TO BE SHIPPED WITH OPTION ASSY.

1. ASSEMBLE PER RACAL-DANA WORKMANSHIP STANDARDS.

NOTES: UNLESS OTHERWISE SPECIFIED

8080/85 DED KIT ASSY

SIZE	CODE IDENT NO.	DWG NO.	REV
C	21793	404297	A

SCALE NONE SHEET OF ?

10-83

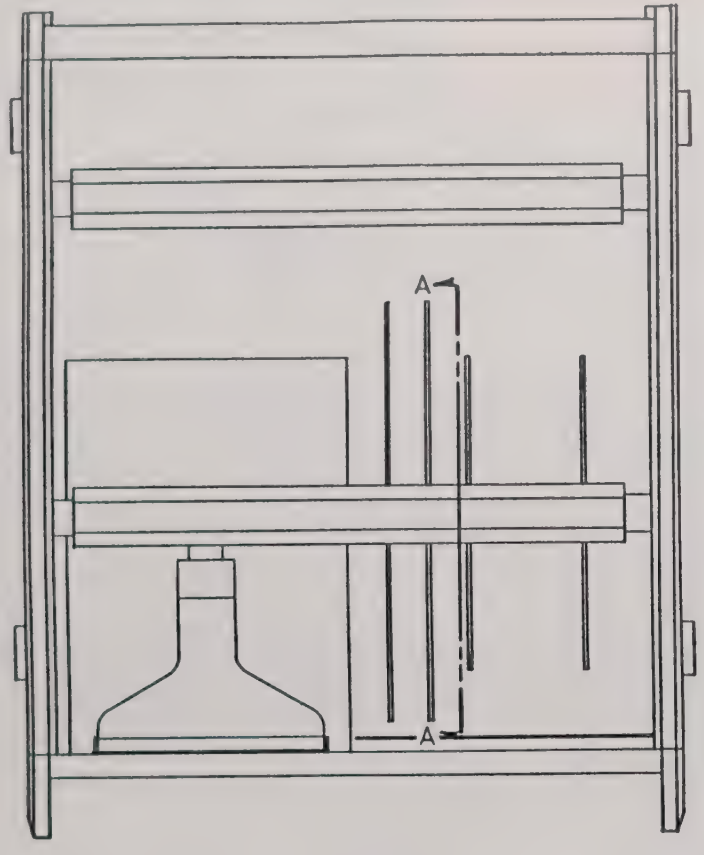

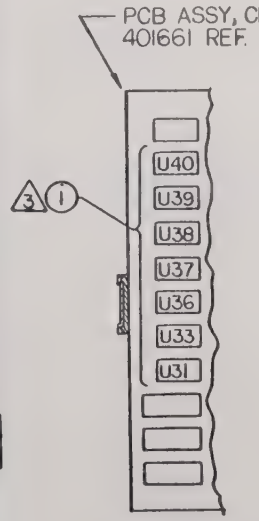

SECTION A-A
NO SCALE

COVER NOT SHOWN FOR CLARITY

3. ITEM 1 MAY BE INSTALLED IN ANY AVAILABLE SOCKET OF THOSE SHOWN.
2. ITEM 3 (4 TO BE SHIPPED WITH OPTION ASSY.
1. ASSEMBLE PER RACAL-DANA WORKMANSHIP STANDARDS.

NOTES: UNLESS OTHERWISE SPECIFIED

8080/85 DED. KIT ASSY

SIZE	CODE IDENT NO	DWG NO.	REV
C	21793	404242	A

SCALE NONE SHEET OF 2

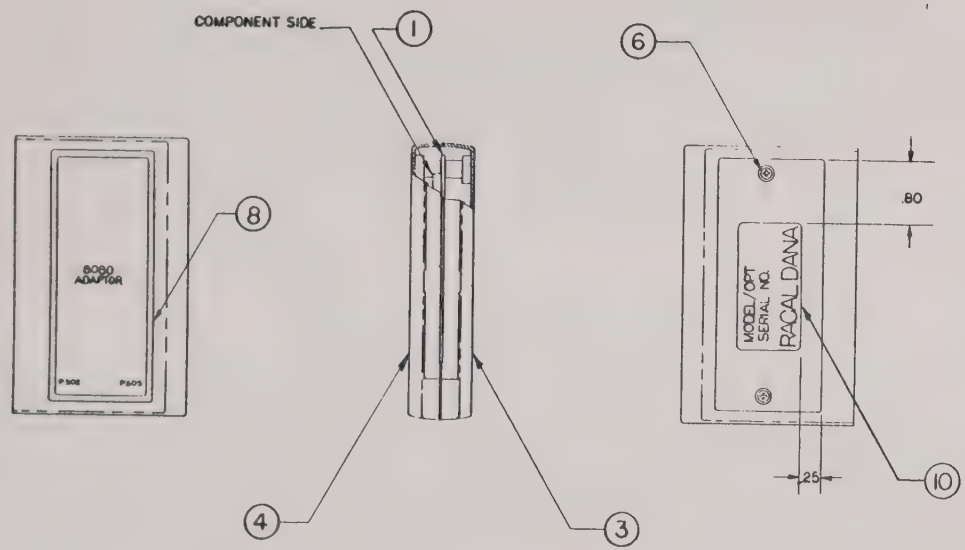

1. ASSEMBLY PROCESSES & PROCEDURES TO CONFORM TO RACAL-DANA WORKMANSHIP STANDARD.

NOTES: UNLESS OTHERWISE SPECIFIED

ADAPTOR ASSY, 8080 OPT.

SIZE	CODE IDENT NO	DWG NO.	REV
C	21793	404230	A

SCALE NONE | SHEET 1 OF 2

10-85

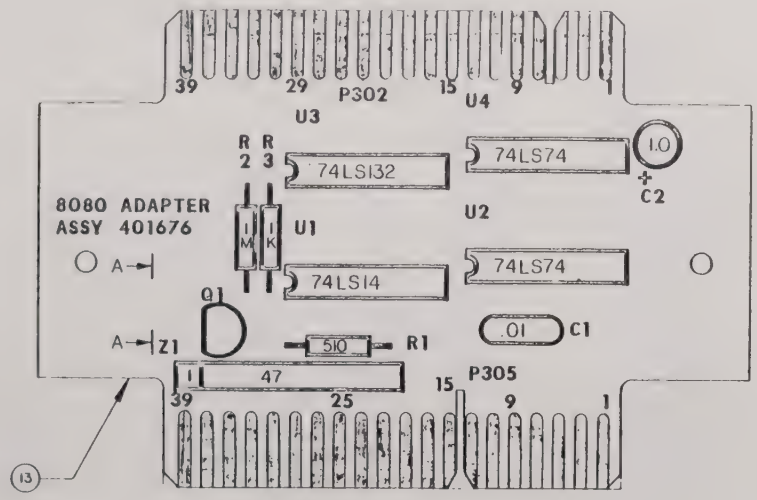

VIEW AA
SCALE NONE

5. ALL COMPONENTS MUST NOT EXCEED .250 ABOVE PCB
4. CAPACITORS ARE IN UF.
3. RESISTORS ARE IN OHMS
2. REFERENCE SCHEMATIC NO 431676
1. ASSEMBLY PROCESSES & PROCEDURES TO CONFORM TO RACAL DANA WORKMANSHIP STANDARD.

NOTES UNLESS OTHERWISE SPECIFIED

PROPRIETARY NOTICE

THIS DOCUMENT AND THE TECHNICAL DATA HERE ON DISCLOSED ARE PROPRIETARY TO RACAL DANA INSTRUMENTS INC AND SHALL NOT WITHOUT EX PRESS WRITTEN PERMISSION OF RACAL DANA IN STRUMENTS INC BE USED RELEASED OR DISCLOSED IN WHOLE OR IN PART OR USED TO SOLICIT QUOTA TIONS FROM A COMPETITIVE SOURCE OR USED FOR MANUFACTURE BY ANYONE OTHER THAN RACAL DANA INSTRUMENTS INC THE INFORMATION HERE ON HAS BEEN DEVELOPED AT PRIVATE EXPENSE AND MAY ONLY BE USED FOR PURPOSES OF ENGI NEERING EVALUATION AND FOR INCORPORATION INTO TECHNICAL SPECIFICATIONS AND OTHER DOC UMENTS WHICH SPECIFY PROCUREMENT OF PRO DUCTS FROM RACAL DANA INSTRUMENTS INC

PCB ASSY-8080 ADPTR

SIZE	CODE IDENT NO	DWG NO.	REV
D	21793	401676	C

SCALE 4/1 SHEET 1 OF 2

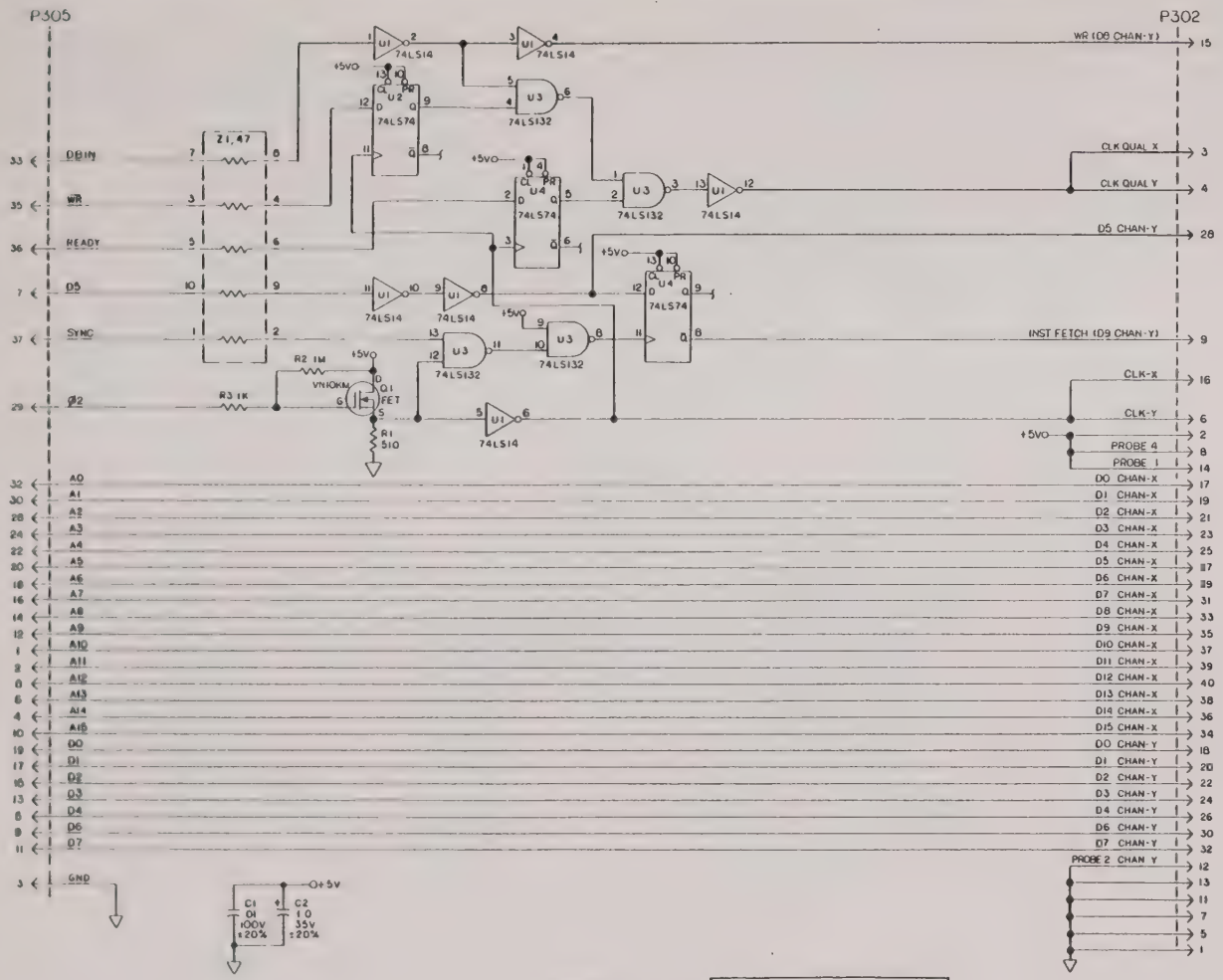

UNUSED LOGIC & NETWORKS		
DES.	TYPE	PINS
U2	74LS74	1,2,3,4,5,6

REF DES.	IC TYPE	V+ PIN NO	GND PIN NO.
U4	74LS74	14	7
U3	74LS132	14	7
U2	74LS74	14	7
U1	74LS14	14	7
IC POWER CONNECTIONS			

P305	
R3	
Q1	
U4	
Z1	
C2	
HIGHEST	NOT USED
REFERENCE DESIGNATIONS	

PROPRIETARY NOTICE

THIS DOCUMENT AND THE TECHNICAL DATA HERE ON DISCLOSED ARE PROPRIETARY TO RACAL DANA INSTRUMENTS INC. AND SHALL NOT WITHOUT EXPRESS WRITTEN PERMISSION OF RACAL DANA INSTRUMENTS INC BE USED RELEASED OR DISCLOSED IN WHOLE OR IN PART OR USED TO SOLICIT QUOTATIONS FROM A COMPETITIVE SOURCE OR USED FOR MANUFACTURE BY ANYONE OTHER THAN RACAL DANA INSTRUMENTS INC THE INFORMATION HERE ON HAS BEEN DEVELOPED AT PRIVATE EXPENSE AND MAY ONLY BE USED FOR PURPOSES OF ENGINEERING EVALUATION AND FOR INCORPORATION INTO TECHNICAL SPECIFICATIONS AND OTHER DOCUMENTS WHICH SPECIFY PROCUREMENT OF PRODUCTS FROM RACAL DANA INSTRUMENTS INC

2. CAPACITORS ARE IN UF.
1. RESISTORS ARE IN OHMS. 1/4 W, ± 5%

NOTES UNLESS OTHERWISE SPECIFIED

SCHEM , 8080 ADPTR

SIZE	CODE IDENT NO	DWG NO	REV
D	21793	431676	D
SCALE NONE		SHEET 1 OF 1	

10-87

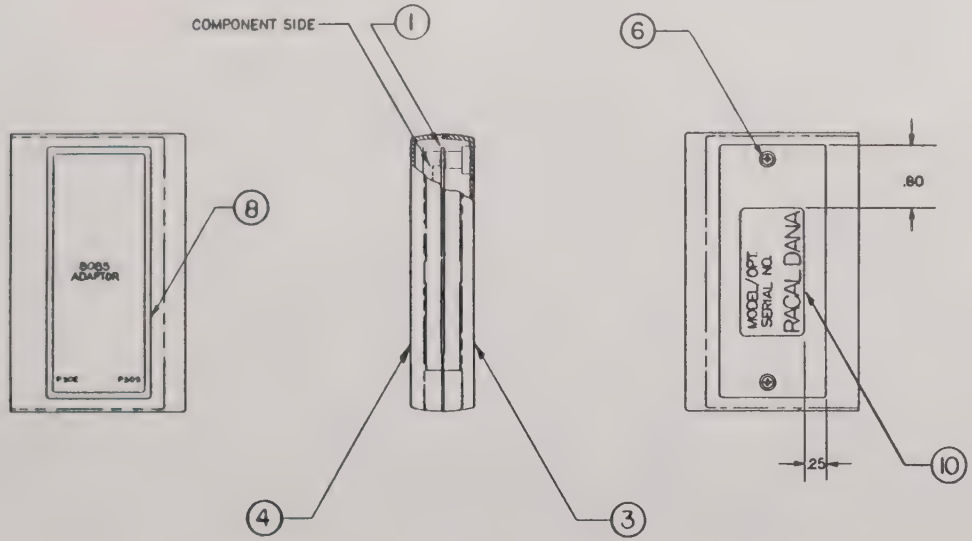

1. ASSEMBLY PROCESSES & PROCEDURES TO CONFORM TO RACAL-DANA WORKMANSHIP STANDARD.

NOTES: UNLESS OTHERWISE SPECIFIED

ADAPTOR ASSY, 8085 OPT.

SIZE	CODE IDENT NO	DWG NO.	REV
C	21793	404241	A

SCALE 1/1 SHEET 1 OF 2

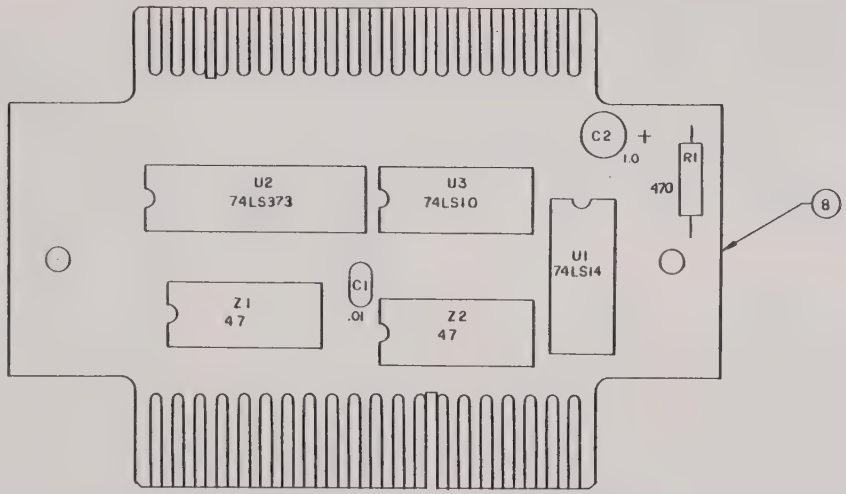

NOTES UNLESS OTHERWISE SPECIFIED

1. ASSEMBLY PROCESSES & PROCEDURES TO CONFORM TO RACAL-DANA WORKMANSHIP STANDARDS.
2. REFERENCE SCHEMATIC 431677.
3. RESISTORS ARE IN OHMS.
4. CAPACITORS ARE IN UF
5. ALL COMPONENTS MUST NOT EXCEED .250 ABOVE PCB.
6. AFTER INSTALLATION, BEND C2 AT LEADS TO CONFORM WITH NOTE 5.

PROPRIETARY NOTICE

THIS DOCUMENT AND THE TECHNICAL DATA HERE ON DISCLOSED ARE PROPRIETARY TO RACAL DANA INSTRUMENTS INC AND SHALL NOT WITHOUT EX PRESS WRITTEN PERMISSION OF RACAL DANA IN STRUMENTS INC BE USED, RELEASED OR DISCLOSED IN WHOLE OR IN PART OR USED TO SOLICIT QUOTA TIONS FROM A COMPETITIVE SOURCE OR USED FOR MANUFACTURE BY ANYONE OTHER THAN RACAL DANA INSTRUMENTS INC THE INFORMATION HERE ON HAS BEEN DEVELOPED AT PRIVATE EXPENSE AND MAY ONLY BE USED FOR PURPOSES OF ENGI NEERING EVALUATION AND FOR INCORPORATION INTO TECHNICAL SPECIFICATIONS AND OTHER DOC UMENTS WHICH SPECIFY PROCUREMENT OF PRO DUCTS FROM RACAL DANA INSTRUMENTS INC

PCB ASSY,8085 ADPTR

SIZE	CODE IDENT NO	DWG NO.	REV
D	21793	401677	E

SCALE 4/1 SHEET 1 OF 2

10-89

10-90

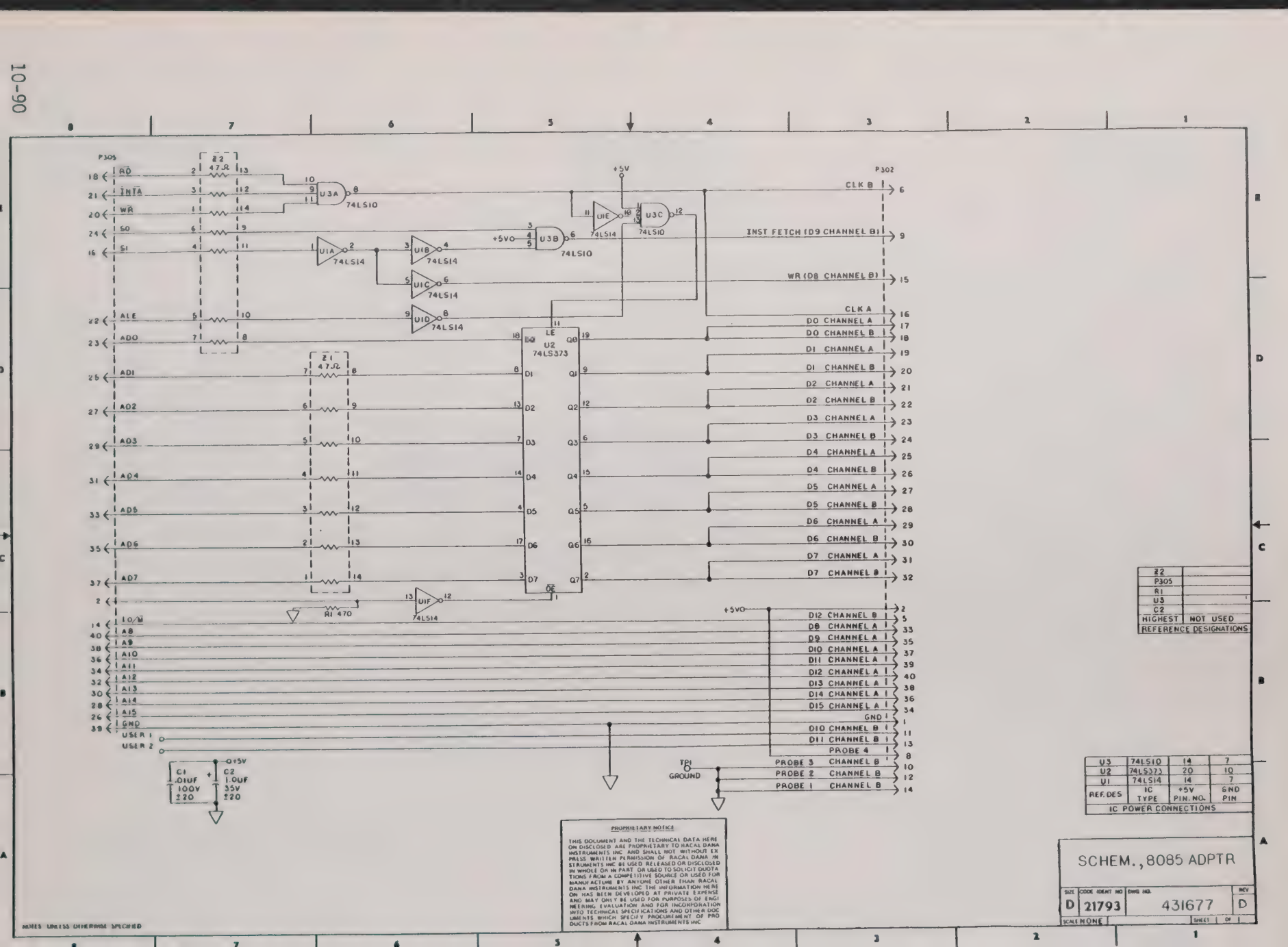

REFERENCE DESIGNATIONS	
R2	
P305	
R1	
U3	
C2	
HIGHEST	NOT USED

REF. DES	IC TYPE	+5V PIN. NO.	GND PIN
U3	74LS10	14	7
U2	74LS373	20	10
U1	74LS14	14	7

IC POWER CONNECTIONS

PROPRIETARY NOTICE

THIS DOCUMENT AND THE TECHNICAL DATA HERE ON DISCLOSED ARE PROPRIETARY TO RACAL DANA INSTRUMENTS INC AND SHALL NOT WITHOUT EXPRESS WRITTEN PERMISSION OF RACAL DANA INSTRUMENTS INC BE USED RELEASED OR DISCLOSED IN WHOLE OR IN PART OR USED TO SOLICIT QUOTATIONS FROM A COMPETITIVE SOURCE OR USED FOR MANUFACTURE BY ANYONE OTHER THAN RACAL DANA INSTRUMENTS INC THE INFORMATION HERE ON HAS BEEN DEVELOPED AT PRIVATE EXPENSE AND MAY ONLY BE USED FOR PURPOSES OF ENGINEERING EVALUATION AND FOR INCORPORATION INTO TECHNICAL SPECIFICATIONS AND OTHER DOCUMENTS WHICH SPECIFY PROCUREMENT OF PRODUCTS FROM RACAL DANA INSTRUMENTS INC

NOTES UNLESS OTHERWISE SPECIFIED

SCHEM., 8085 ADPTR

SIZE	CODE IDENT NO	DWG NO	REV
D	21793	431677	D

SCALE NONE SHEET 1 OF 1

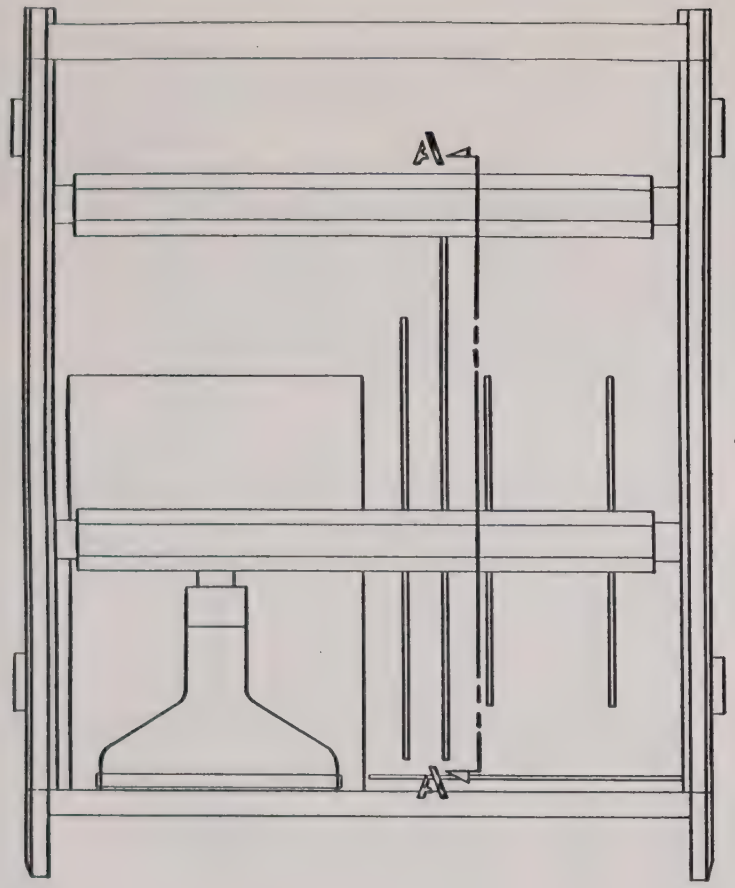

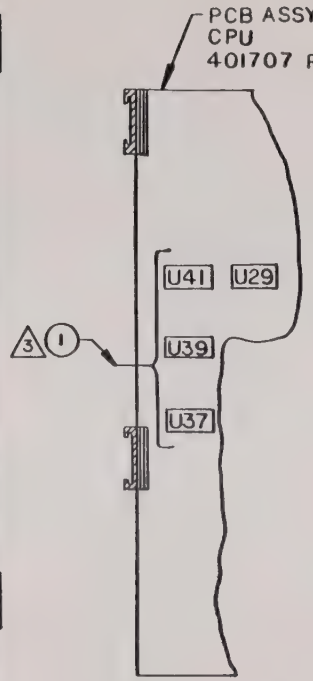

SECTION A-A
SCALE:NONE

COVER NOT SHOWN FOR CLARITY

3. ITEM 1 MAY BE INSTALLED IN ANY AVAILABLE SOCKET OF THOSE SHOWN.
2. ITEMS 3,4,6-9 TO BE SHIPPED WITH OPTION ASSEMBLY.
1. ASSEMBLE PER RACAL-DANA WORKMANSHIP STANDARDS.

NOTES: UNLESS OTHERWISE SPECIFIED

KIT ASSY, Z80
DISASEM OPT. Z80A

SIZE	CODE IDENT NO.	DWG NO.	REV
C	21793	404302	A
SCALE NONE		SHEET 1 OF 2	

10-91

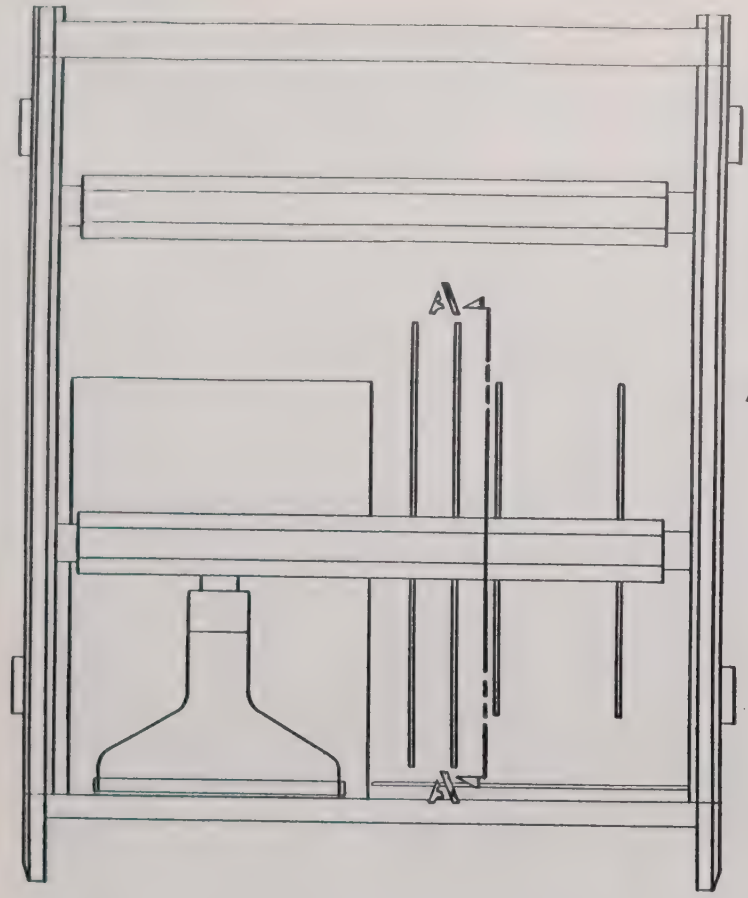

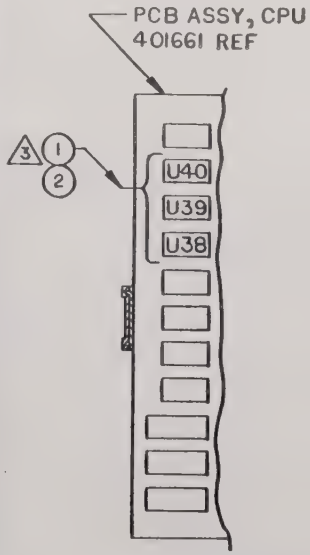

SECTION A-A
SCALE: NONE

COVER NOT SHOWN FOR CLARITY

3 a. INSTALL ITEM 1 IN U40 +
INSTALL ITEM 2 IN U39,
OR
b. INSTALL ITEM 1 IN U39 +
INSTALL ITEM 2 IN U38.

2. ITEMS 4,5,7-10 TO BE SHIPPED WITH OPTION ASSEMBLY.

1. ASSEMBLE PER RACAL-DANA WORKMANSHIP STANDARDS.

NOTES: UNLESS OTHERWISE SPECIFIED

KIT ASSY, Z80
DISASEM OPT. Z80

SIZE	CODE IDENT NO	DWG NO.	REV
C	21793	404301	A

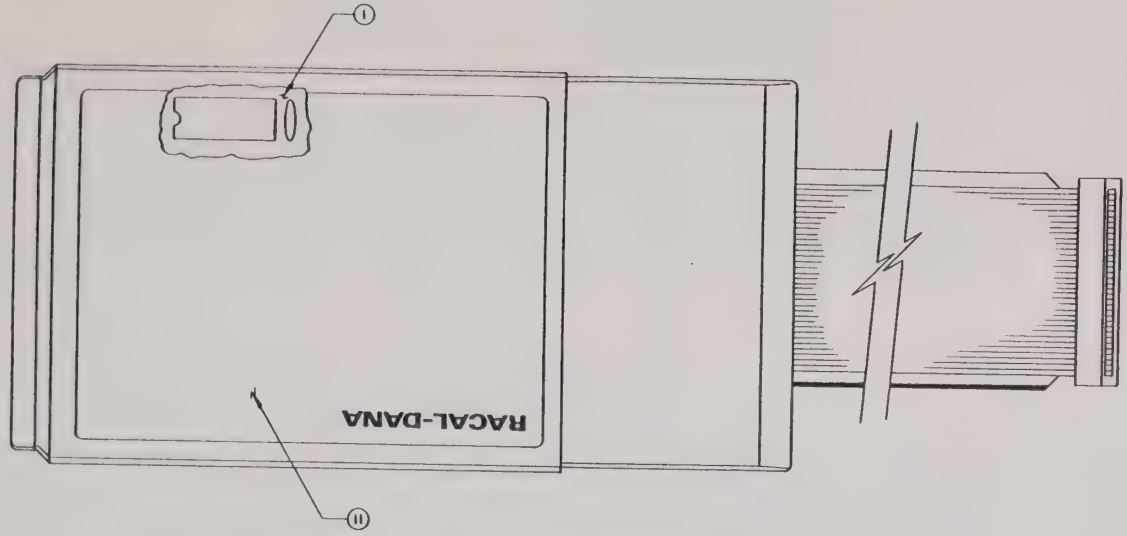

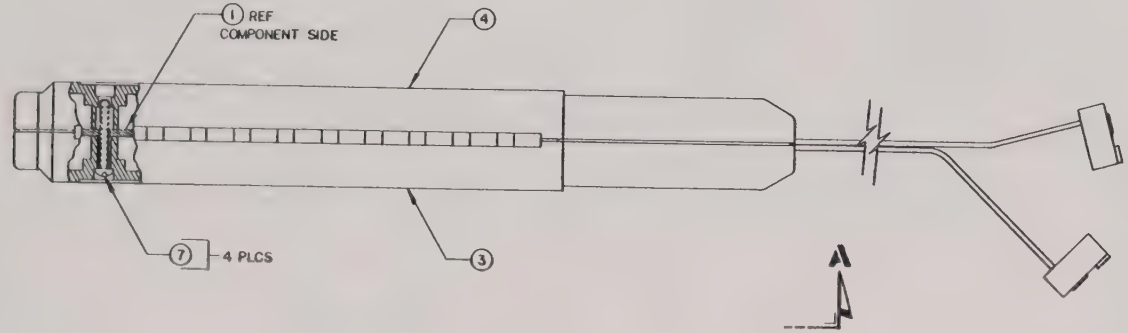

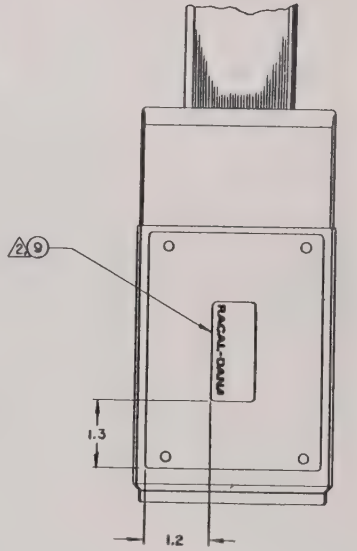

VIEW A-A
ROTATED 90° CCW
SCALE: 1/1

PROPRIETARY NOTICE

THIS DOCUMENT AND THE TECHNICAL DATA HERE ON DISCLOSED ARE PROPRIETARY TO RACAL DANA INSTRUMENTS INC AND SHALL NOT WITHOUT EX PRESS WRITTEN PERMISSION OF RACAL DANA IN STRUMENTS INC BE USED RELEASED OR DISCLOSED IN WHOLE OR IN PART OR USED TO SOLICIT QUOTA TIONS FROM A COMPETITIVE SOURCE OR USED FOR MANUFACTURE BY ANYONE OTHER THAN RACAL DANA INSTRUMENTS INC THE INFORMATION HERE ON HAS BEEN DEVELOPED AT PRIVATE EXPENSE AND MAY ONLY BE USED FOR PURPOSES OF ENGI NEERING EVALUATION AND FOR INCORPORATION INTO TECHNICAL SPECIFICATIONS AND OTHER DOC UMENTS WHICH SPECIFY PROCUREMENT OF PRO DUCTS FROM RACAL DANA INSTRUMENTS INC

2 TYPE PERTINENT DATA ON ITEM NO. 9, ATTACH ITEM NO. 9 WHERE SHOWN.

1. ASSEMBLE PER RACAL-DANA WORKMANSHIP STANDARDS.

NOTES: UNLESS OTHERWISE SPECIFIED

PROBE ASSY, Z-80 μP

SIZE	CODE IDENT NO	DWG NO.	REV
D	21793	404296	A

SCALE 2/1 SHEET 1 OF 2

10-93

10-94

SECTION A-A
SCALE: NONE
TYPICAL FOR C7, C8 & C12

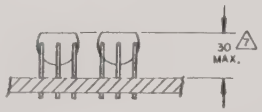

SECTION B-B
SCALE : NONE

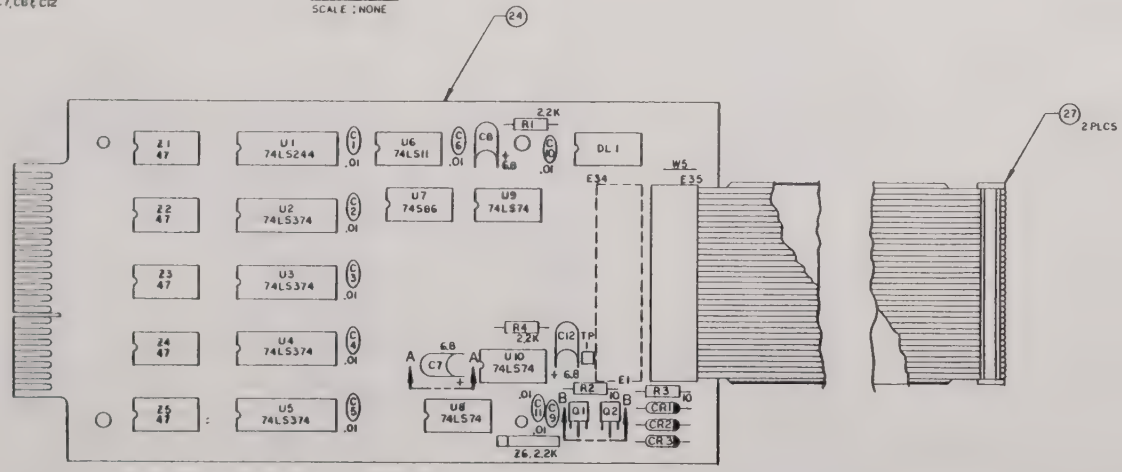

⚠ ALL COMPONENTS MUST NOT EXCEED .30 ABOVE PCB.
6. Q1 IS 2N4250, Q2 IS 2N3646.
5. DIODES ARE IN946.
4. CAPACITORS ARE IN UF.
3. RESISTORS ARE IN OHMS.
2. REFERENCE SCHEMATIC 431708.
1. ASSEMBLY PROCESSES & PROCEDURES TO CONFORM TO RACAL-DANA WORKMANSHIP STANDARD.

MILS UNLESS OTHERWISE SPECIFIED

PROPRIETARY NOTICE

THIS DOCUMENT AND THE TECHNICAL DATA HERE ON DISCLOSED ARE PROPRIETARY TO RACAL DANA INSTRUMENTS INC AND SHALL NOT WITHOUT EX PRESS WRITTEN PERMISSION OF RACAL DANA IN STRUMENTS INC BE USED RELEASED OR DISCLOSED IN WHOLE OR IN PART OR USED TO SOLICIT QUOTA TIONS FROM A COMPETITIVE SOURCE OR USED FOR MANUFACTURE BY ANYONE OTHER THAN RACAL DANA INSTRUMENTS INC THE INFORMATION HERE ON HAS BEEN DEVELOPED AT PRIVATE EXPENSE AND MAY ONLY BE USED FOR PURPOSES OF ENGI NEERING EVALUATION AND FOR INCORPORATION INTO TECHNICAL SPECIFICATIONS AND OTHER DOC UMENTS WHICH SPECIFY PROCUREMENT OF PRO DUCTS FROM RACAL DANA INSTRUMENTS INC

PCB ASSY,
Z80 UP PROBE

SIZE	CODE IDENT NO	DWG NO	REV
D	21793	401708	A

SCALE 2/1 SHEET 1 OF 3

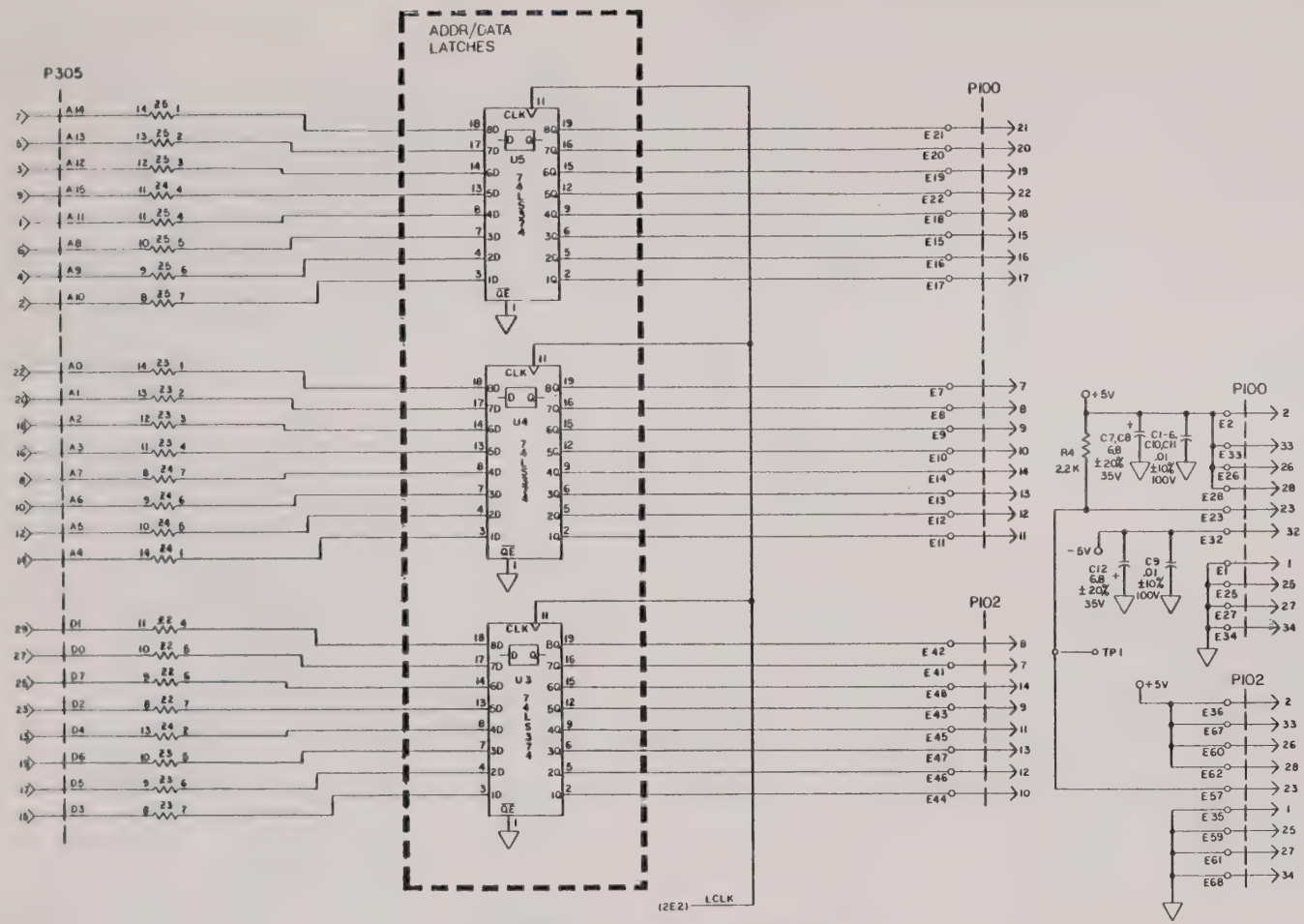

UNUSED LOGIC & NETWORKS		
DES.	TYPE	PINS
U2	74LS374	2-5
U6	74LS11	3-6
U10	74LS74	8-13
Z1	47	1-3, 12-14

REF. DES.	IC TYPE	+5 PIN NO	GND PIN NO.
IC POWER CONNECTIONS			
U8-10	74LS74	14	7
U7	74S86	14	7
U6	74LS11	14	7
U2-5	74LS374	20	10
U1	74LS244	20	10

REFERENCE DESIGNATIONS	
E68	
TP1	
W5	
DL1	
Z6	
R4	
Q2	
U10	
CR3	
C12	
HIGHEST	NOT USED

PROPRIETARY NOTICE

THIS DOCUMENT AND THE TECHNICAL DATA HERE ON DISCLOSED, ARE PROPRIETARY TO RACAL DANA INSTRUMENTS INC AND SHALL NOT WITHOUT EXPRESS WRITTEN PERMISSION OF RACAL DANA INSTRUMENTS INC BE USED, RELEASED OR DISCLOSED IN WHOLE OR IN PART OR USED TO SOLICIT QUOTATIONS FROM A COMPETITIVE SOURCE OR USED FOR MANUFACTURE BY ANYONE OTHER THAN RACAL DANA INSTRUMENTS INC. THE INFORMATION HERE ON HAS BEEN DEVELOPED AT PRIVATE EXPENSE AND MAY ONLY BE USED FOR PURPOSES OF ENGINEERING EVALUATION AND FOR INCORPORATION INTO TECHNICAL SPECIFICATIONS AND OTHER DOCUMENTS WHICH SPECIFY PROCUREMENT OF PRODUCTS FROM RACAL DANA INSTRUMENTS INC.

NOTES UNLESS OTHERWISE SPECIFIED

1. RESISTOR VALUES ARE IN OHMS, ±5%, 1/4 WATT.
2. CAPACITORS ARE IN UF.
3. RESISTOR NETWORKS Z1 THRU Z5 ARE 47 OHMS.
4. W5 INSTALLED ONLY.

SCHEMATIC, Z80 UP PROBE

SIZE	CODE IDENT NO.	DWG NO.	REV
D	21793	431708	A

SCALE NONE SHEET 1 OF 2

10-95

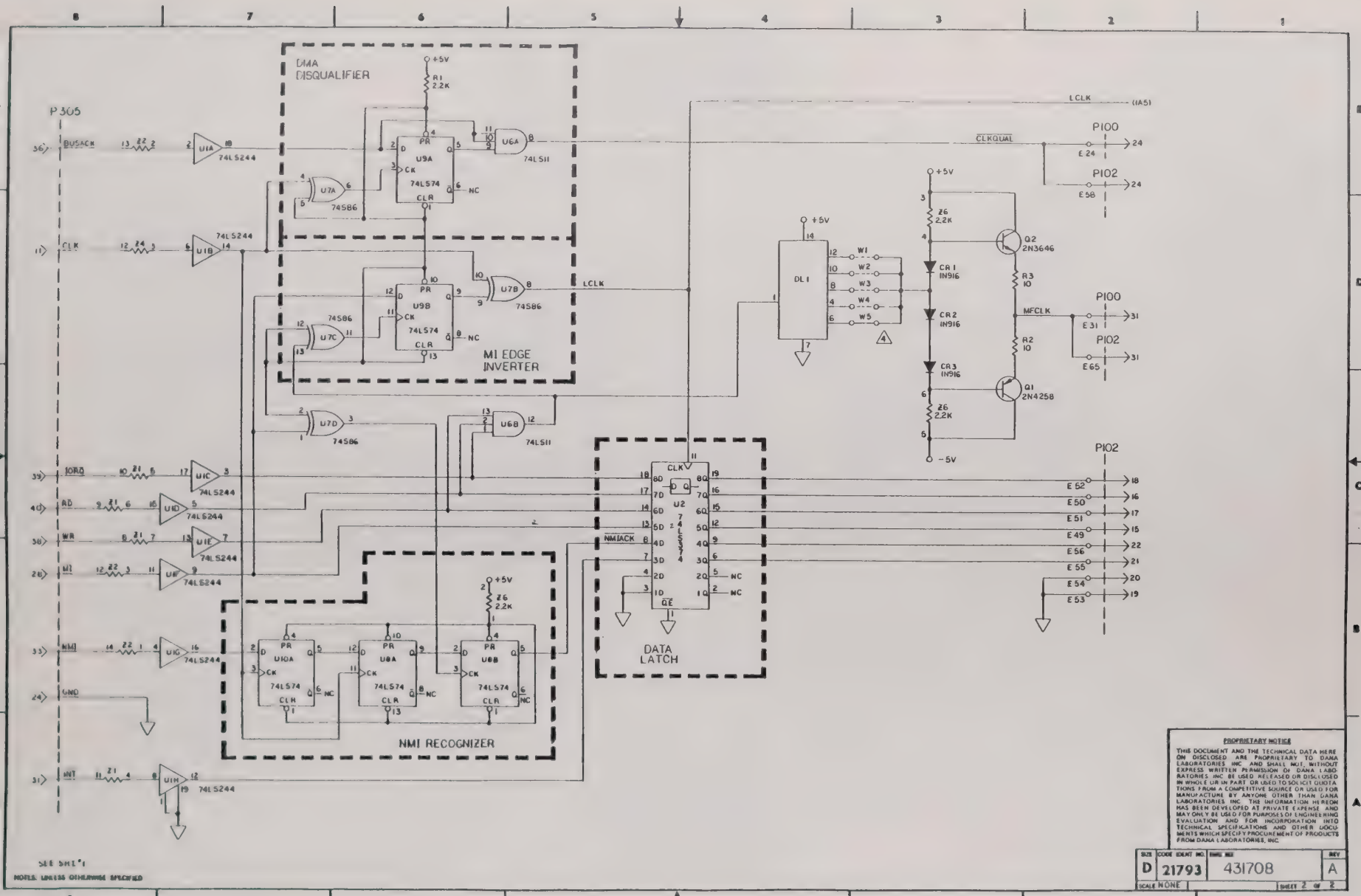

PROPRIETARY NOTICE
THIS DOCUMENT AND THE TECHNICAL DATA HERE ON DISCLOSED ARE PROPRIETARY TO DANA LABORATORIES INC. AND SHALL NOT, WITHOUT EXPRESS WRITTEN PERMISSION OF DANA LABORATORIES INC BE USED RELEASED OR DISCLOSED IN WHOLE OR IN PART OR USED TO SOLICIT QUOTATIONS FROM A COMPETITIVE SOURCE OR USED FOR MANUFACTURE BY ANYONE OTHER THAN DANA LABORATORIES INC. THE INFORMATION HEREON HAS BEEN DEVELOPED AT PRIVATE EXPENSE AND MAY ONLY BE USED FOR PURPOSES OF ENGINEERING EVALUATION AND FOR INCORPORATION INTO TECHNICAL SPECIFICATIONS AND OTHER DOCUMENTS WHICH SPECIFY PROCUREMENT OF PRODUCTS FROM DANA LABORATORIES, INC.

SIZE	CODE IDENT NO.	DWG NO	REV
D	21793	431708	A
SCALE NONE		SHEET 2 OF 2	

SEE SHT 1
NOTES: UNLESS OTHERWISE SPECIFIED

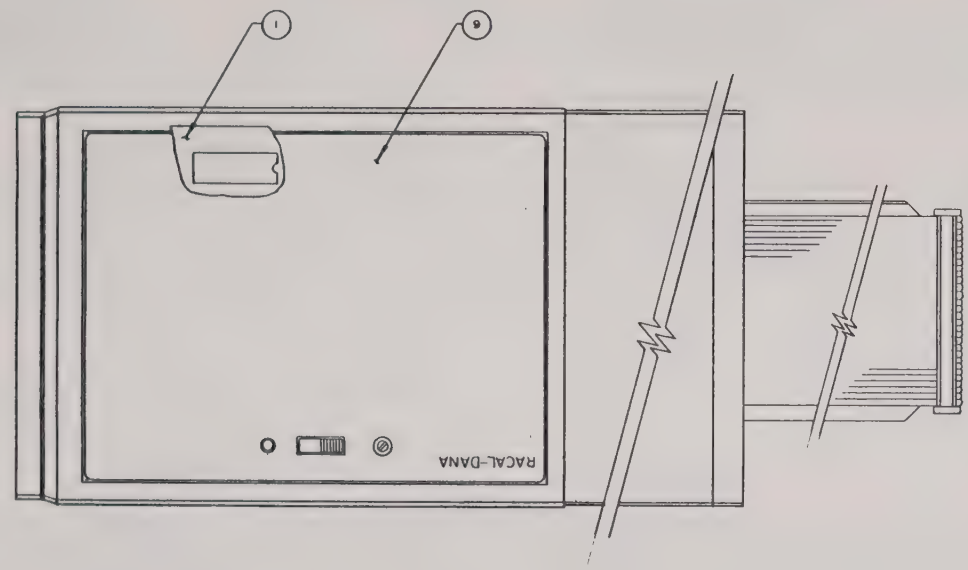

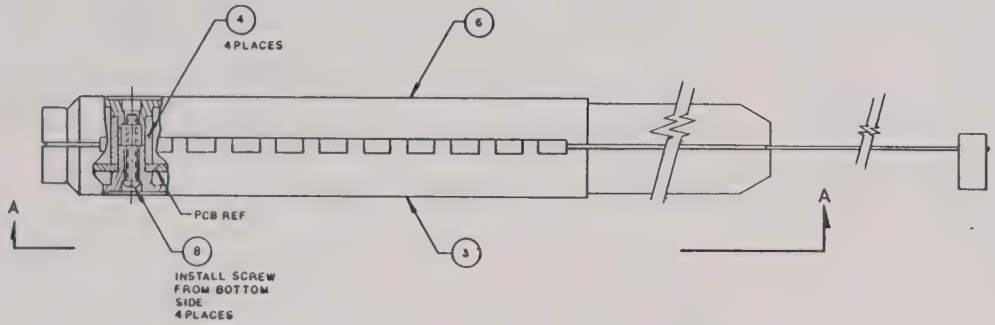

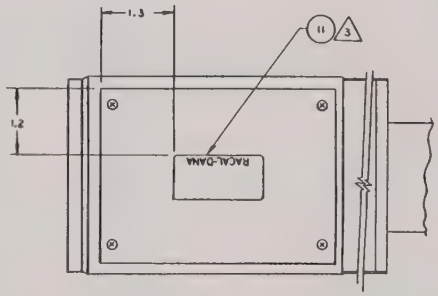

VIEW A-A
NO SCALE

3 TYPE PERTINENT DATA ON ITEM 11. ATTACH ITEM 11 WHERE SHOWN.
2. ITEM 2 AND 7 TO BE SHIPPED WITH PROBE ASSY.
1. ASSEMBLE PER RACAL-DANA WORKMANSHIP STANDARDS.

NOTES: UNLESS OTHERWISE SPECIFIED

PROPRIETARY NOTICE

THIS DOCUMENT AND THE TECHNICAL DATA HERE ON DISCLOSED ARE PROPRIETARY TO RACAL DANA INSTRUMENTS INC. AND SHALL NOT WITHOUT EX PRESS WRITTEN PERMISSION OF RACAL DANA IN STRUMENTS INC. BE USED RELEASED OR DISCLOSED IN WHOLE OR IN PART OR USED TO SOLICIT QUOTA TIONS FROM A COMPETITIVE SOURCE OR USED FOR MANUFACTURE BY ANYONE OTHER THAN RACAL DANA INSTRUMENTS INC. THE INFORMATION HERE ON HAS BEEN DEVELOPED AT PRIVATE EXPENSE AND MAY ONLY BE USED FOR PURPOSES OF ENGI NEERING EVALUATION AND FOR INCORPORATION INTO TECHNICAL SPECIFICATIONS AND OTHER DOC UMENTS WHICH SPECIFY PROCUREMENT OF PRO DUCTS FROM RACAL DANA INSTRUMENTS INC.

PROBE ASSY,VAR.THRSH

SIZE	CODE IDENT NO	DWG NO.	REV
D	21793	404237	B

SCALE NONE SHEET 1 OF 2

10-97

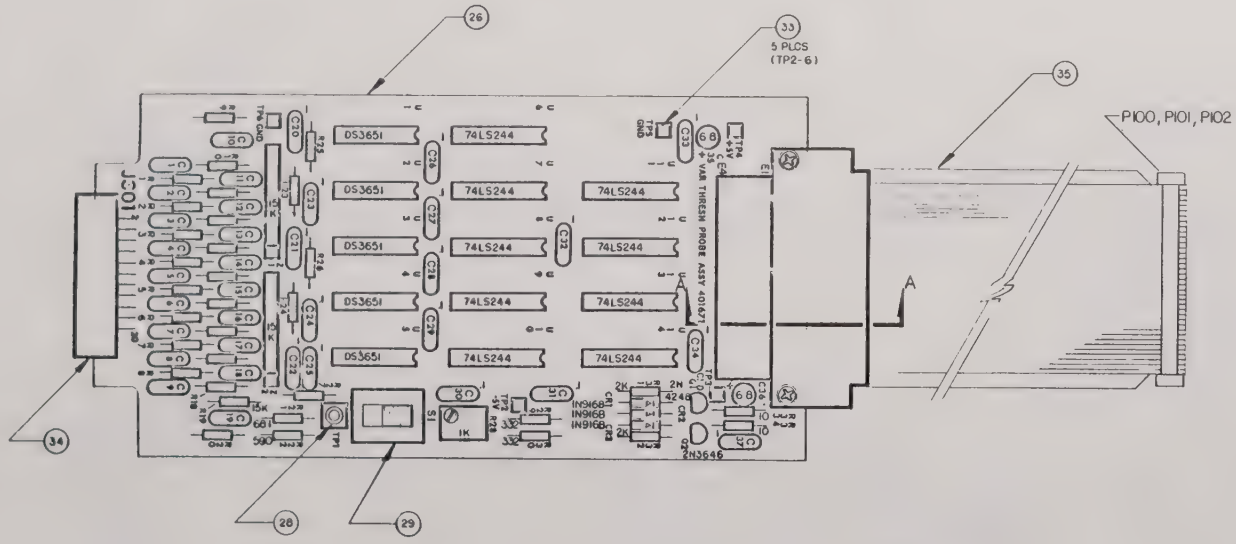

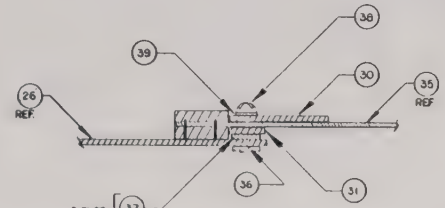

SECTION A-A
SCALE NONE

DETAIL A

2 REFERENCE SCHEMATIC NO 431671.
6 RESISTORS R23 TO 27 ARE JUMPERS (ITEM 32)
5 RESISTORS R1 TO 18 AND R20 ARE 30.1K
4 ASSEMBLY PROCESSES AND PROCEDURES TO CONFORM TO RACAL-DANA WORKMANSHIP STANDARDS
3 CAPACITORS C1 TO 19 ARE 4.7 PF
2 CAPACITOR VALUES ARE IN MICROFARADS
1 RESISTOR VALUES ARE IN OHMS
NOTES: UNLESS OTHERWISE SPECIFIED

PROPRIETARY NOTICE

THIS DOCUMENT AND THE TECHNICAL DATA HERE ON DISCLOSED ARE PROPRIETARY TO RACAL DANA INSTRUMENTS INC AND SHALL NOT WITHOUT EXPRESS WRITTEN PERMISSION OF RACAL DANA INSTRUMENTS INC BE USED, RELEASED OR DISCLOSED IN WHOLE OR IN PART OR USED TO FURNISH DATA TIONS FROM A COMPETITIVE SOURCE FOR SELECTION MANUFACTURE BY ANYONE OTHER THAN RACAL DANA INSTRUMENTS INC. THE INFORMATION HERE ON HAS BEEN DEVELOPED AT PRIVATE EXPENSE AND MAY ONLY BE USED FOR PURPOSES OF EVALUATION AND FOR INCORPORATION INTO TECHNICAL SPECIFICATIONS AND OTHER DOCUMENTS WHICH SPECIFY PROCUREMENT OF PRODUCTS FROM RACAL DANA INSTRUMENTS INC

PCB ASSY, VAR
THRSHLD PROBE

SIZE	CODE IDENT NO	DWG NO	REV
D	21793	401671	C

SCALE 2:1 SHEET 1 OF 3

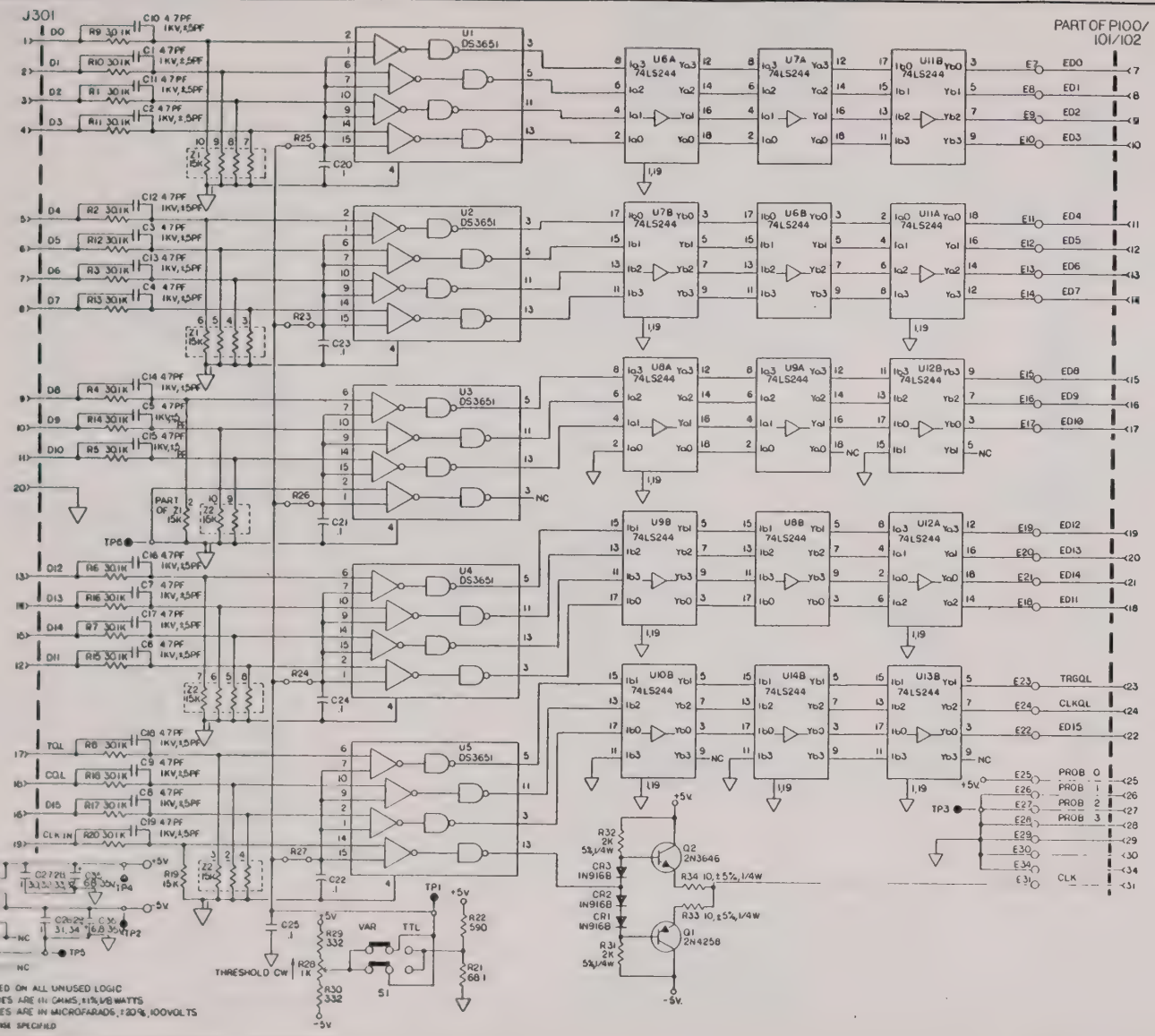

E34	
P102	
J301	
C37	
R34	
Z2	
TP6	
S1	
Q2	
U14	
CR3	
HIGHEST	NOT USED

REFERENCE DESIGNATIONS

U6-14	74LS244	20	10	-
U1-5	DS3651	16	8	12
REF DES	IC TYPE	+5V PIN NO	GND PIN NO	-5V PIN NO

IC POWER CONNECTIONS

SCHEM, VAR. THRESHOLD PROBE

SIZE	CODE IDENT NO	DWG NO	REV
D	21793	431671	C

SCALE NONE SHEET 1 OF 1

10-99

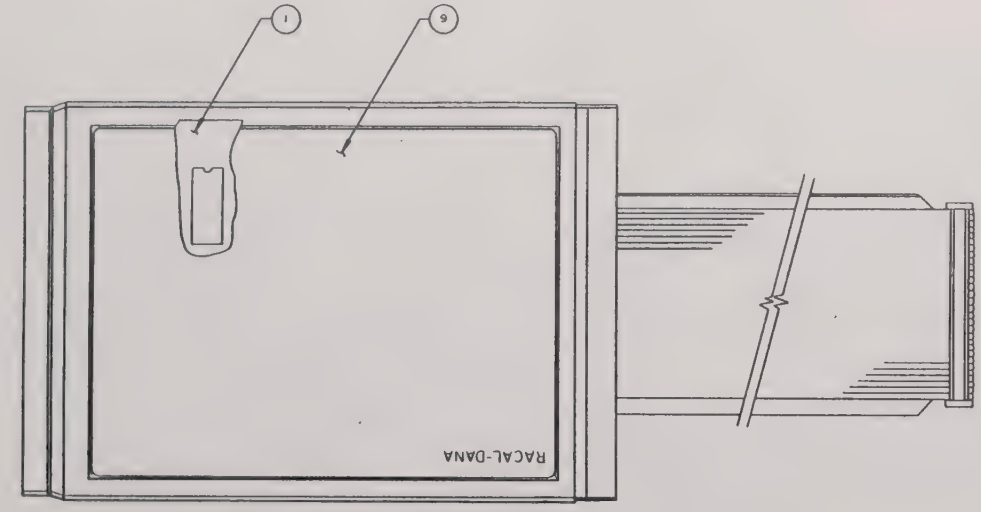

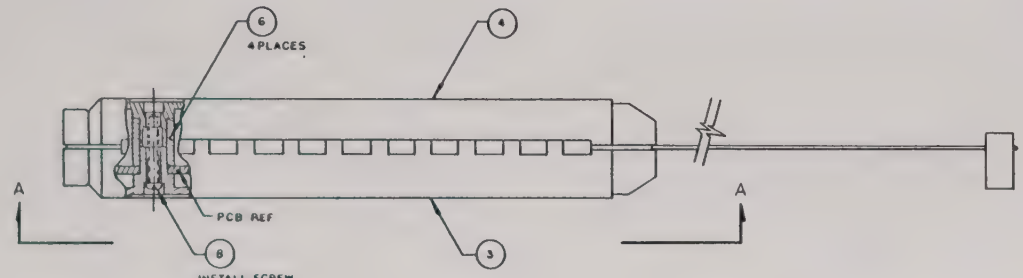

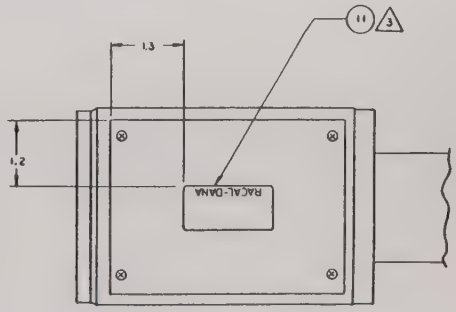

VIEW A-A
NO SCALE

PROPRIETARY NOTICE

THIS DOCUMENT AND THE TECHNICAL DATA HEREON DISCLOSED ARE PROPRIETARY TO RACAL-DANA INSTRUMENTS INC. AND SHALL NOT WITHOUT EXPRESS WRITTEN PERMISSION OF RACAL-DANA INSTRUMENTS INC BE USED RELEASED OR DISCLOSED IN WHOLE OR IN PART OR USED TO SOLICIT QUOTATIONS FROM A COMPETITIVE SOURCE OR USED FOR MANUFACTURE BY ANYONE OTHER THAN RACAL-DANA INSTRUMENTS INC. THE INFORMATION HEREON HAS BEEN DEVELOPED AT PRIVATE EXPENSE AND MAY ONLY BE USED FOR PURPOSES OF ENGINEERING EVALUATION AND FOR INCORPORATION INTO TECHNICAL SPECIFICATIONS AND OTHER DOCUMENTS WHICH SPECIFY PROCUREMENT OF PRODUCTS FROM RACAL-DANA INSTRUMENTS INC

3 TYPE PERTINENT DATA ON ITEM 11. ATTACH ITEM 11 WHERE SHOWN.
2. ITEM 2 AND 7 TO BE SHIPPED WITH PROBE ASSY.
1. ASSEMBLE PER RACAL-DANA WORKMANSHIP STANDARDS.

NOTES: UNLESS OTHERWISE SPECIFIED

PROBE ASSY, FXD. THRSH			
SIZE D	CODE IDENT NO 21793	DWG NO 404227	REV A
SCALE NONE		SHEET 1 OF 2	

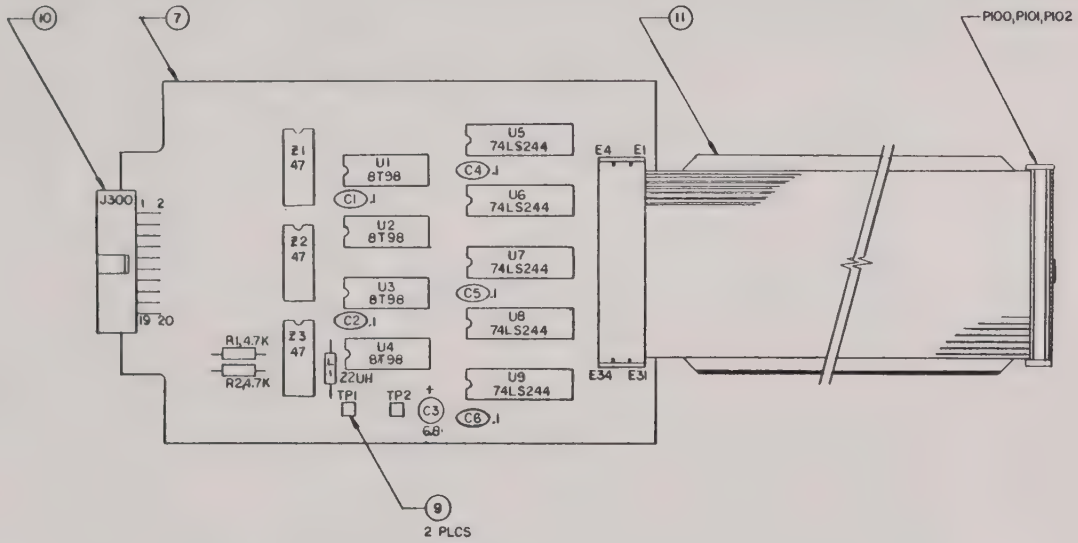

5. U5,U6,U7,U8, AND U9 ARE COLOR CODED PARTS.
4. CAPACITORS ARE IN UF.
3. RESISTORS ARE IN OHMS.
2. REFERENCE SCHEMATIC NO. 431670.
1. ASSEMBLY PROCESSES & PROCEDURES TO CONFORM TO RACAL DANA WORKMANSHIP STANDARD.

NOTES: UNLESS OTHERWISE SPECIFIED

PROPRIETARY NOTICE

THIS DOCUMENT AND THE TECHNICAL DATA HERE ON DISCLOSED ARE PROPRIETARY TO RACAL DANA INSTRUMENTS INC AND SHALL NOT WITHOUT EX PRESS WRITTEN PERMISSION OF RACAL DANA IN STRUMENTS INC BE USED RELEASED OR DISCLOSED IN WHOLE OR IN PART OR USED TO SOLICIT QUOTA TIONS FROM A COMPETITIVE SOURCE OR USED FOR MANUFACTURE BY ANYONE OTHER THAN RACAL DANA INSTRUMENTS INC THE INFORMATION HERE ON HAS BEEN DEVELOPED AT PRIVATE EXPENSE AND MAY ONLY BE USED FOR PURPOSES OF ENGI NEERING EVALUATION AND FOR INCORPORATION INTO TECHNICAL SPECIFICATIONS AND OTHER DOC UMENTS WHICH SPECIFY PROCUREMENT OF PRO DUCTS FROM RACAL DANA INSTRUMENTS INC

PCB ASSY, FXD. THRSHLD, PROBE

SIZE	CODE IDENT NO	DWG NO.	REV
D	21793	401670	D

SCALE 2/1 SHEET 1 OF 2

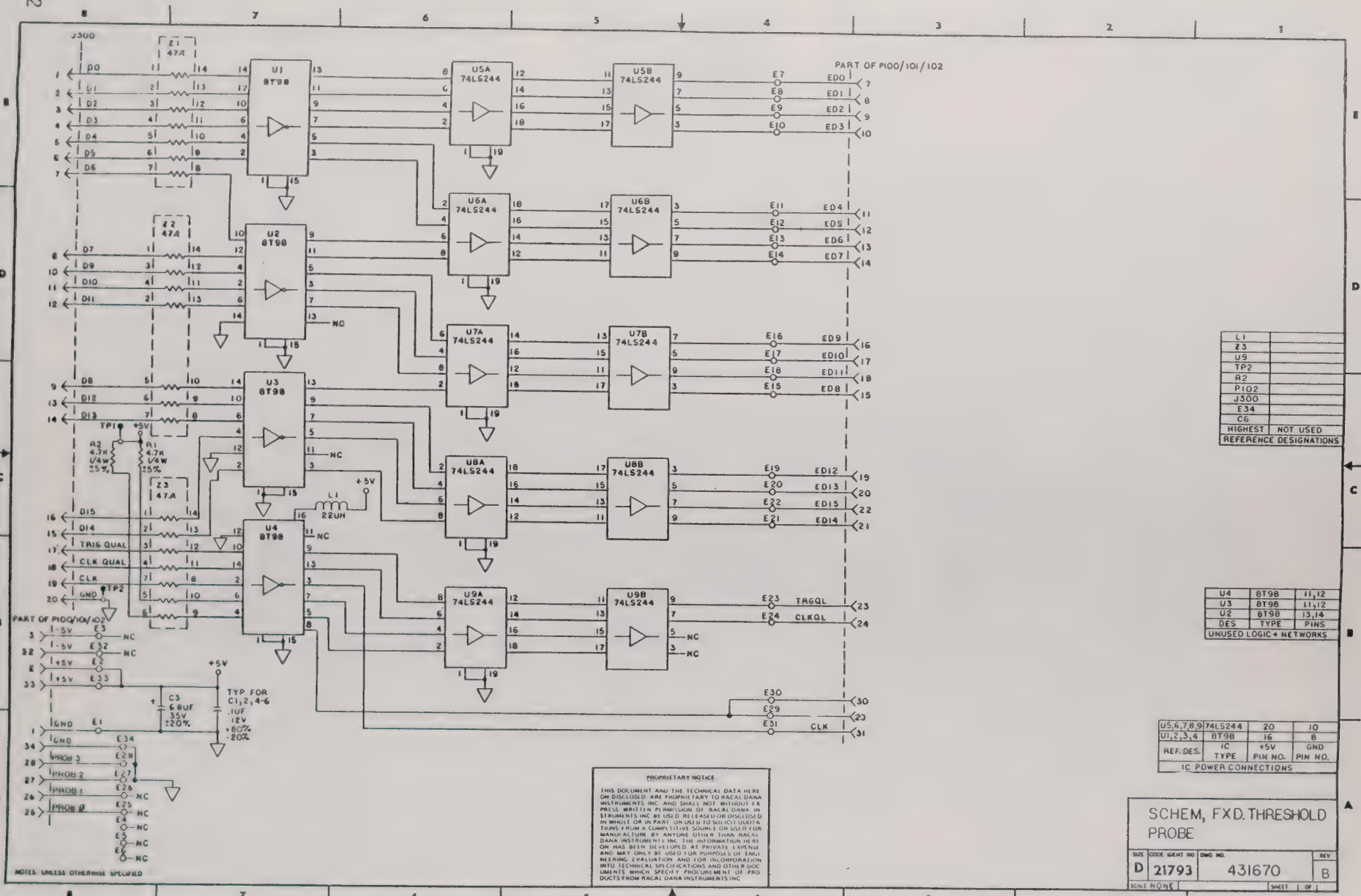

NOTES: UNLESS OTHERWISE SPECIFIED

L1	
Z3	
U9	
TP2	
R2	
P102	
J300	
E34	
C6	
HIGHEST	NOT USED

REFERENCE DESIGNATIONS

U4	8T98	11,12
U3	8T98	11,12
U2	8T98	13,14
DES	TYPE	PINS

UNUSED LOGIC + NETWORKS

U5,6,7,8,9	74LS244	20	10
U1,2,3,4	8T98	16	8
REF. DES.	IC TYPE	+5V PIN NO.	GND PIN NO.

IC POWER CONNECTIONS

PROPRIETARY NOTICE

THIS DOCUMENT AND THE TECHNICAL DATA HERE ON DISCLOSED ARE PROPRIETARY TO RACAL DANA INSTRUMENTS INC. AND SHALL NOT WITHOUT EXPRESS WRITTEN PERMISSION OF RACAL DANA INSTRUMENTS INC BE USED RELEASED OR DISCLOSED IN WHOLE OR IN PART OR USED TO SOLICIT QUOTATIONS FROM A COMPETITIVE SOURCE OR USED FOR MANUFACTURE BY ANYONE OTHER THAN RACAL DANA INSTRUMENTS INC. THE INFORMATION HERE ON HAS BEEN DEVELOPED AT PRIVATE EXPENSE AND MAY ONLY BE USED FOR PURPOSES OF ENGINEERING EVALUATION AND FOR INCORPORATION INTO TECHNICAL SPECIFICATIONS AND OTHER DOCUMENTS WHICH SPECIFY PROCUREMENT OF PRODUCTS FROM RACAL DANA INSTRUMENTS INC

SCHEM, FXD. THRESHOLD PROBE

SIZE	CODE IDENT NO	DWG NO.	REV
D	21793	431670	B

SCALE NONE SHEET 1 OF 1

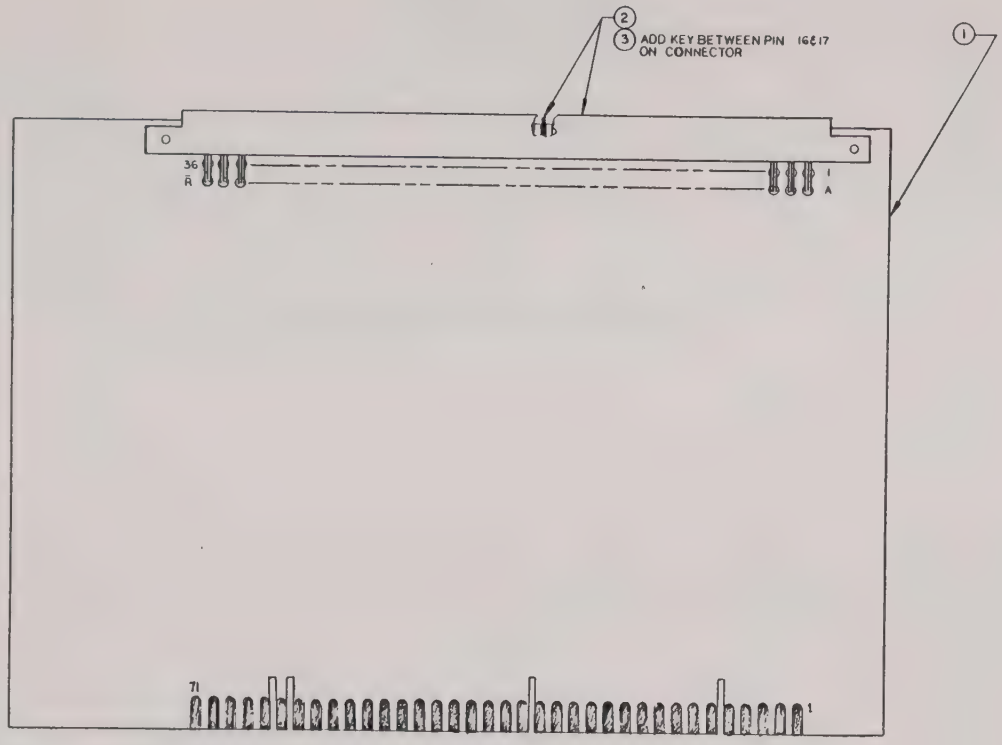

PROPRIETARY NOTICE

THIS DOCUMENT AND THE TECHNICAL DATA HERE ON DISCLOSED ARE PROPRIETARY TO RACAL DANA INSTRUMENTS INC AND SHALL NOT WITHOUT EXPRESS WRITTEN PERMISSION OF RACAL DANA INSTRUMENTS INC BE USED RELEASED OR DISCLOSED IN WHOLE OR IN PART OR USED TO SOLICIT QUOTATIONS FROM A COMPETITIVE SOURCE OR USED FOR MANUFACTURE BY ANYONE OTHER THAN RACAL DANA INSTRUMENTS INC THE INFORMATION HERE ON HAS BEEN DEVELOPED AT PRIVATE EXPENSE AND MAY ONLY BE USED FOR PURPOSES OF ENGINEERING EVALUATION AND FOR INCORPORATION INTO TECHNICAL SPECIFICATIONS AND OTHER DOCUMENTS WHICH SPECIFY PROCUREMENT OF PRODUCTS FROM RACAL DANA INSTRUMENTS INC

NOTES UNLESS OTHERWISE SPECIFIED

1. ASSEMBLY PROCESSES & PROCEDURES TO CONFORM TO RACAL-DANA WORKMANSHIP STANDARD.

PCB ASSY, EXT- XYZ / WG

SIZE	CODE IDENT NO	DWG NO.	REV
D	21793	404243	B

SCALE 2/1 SHEET OF

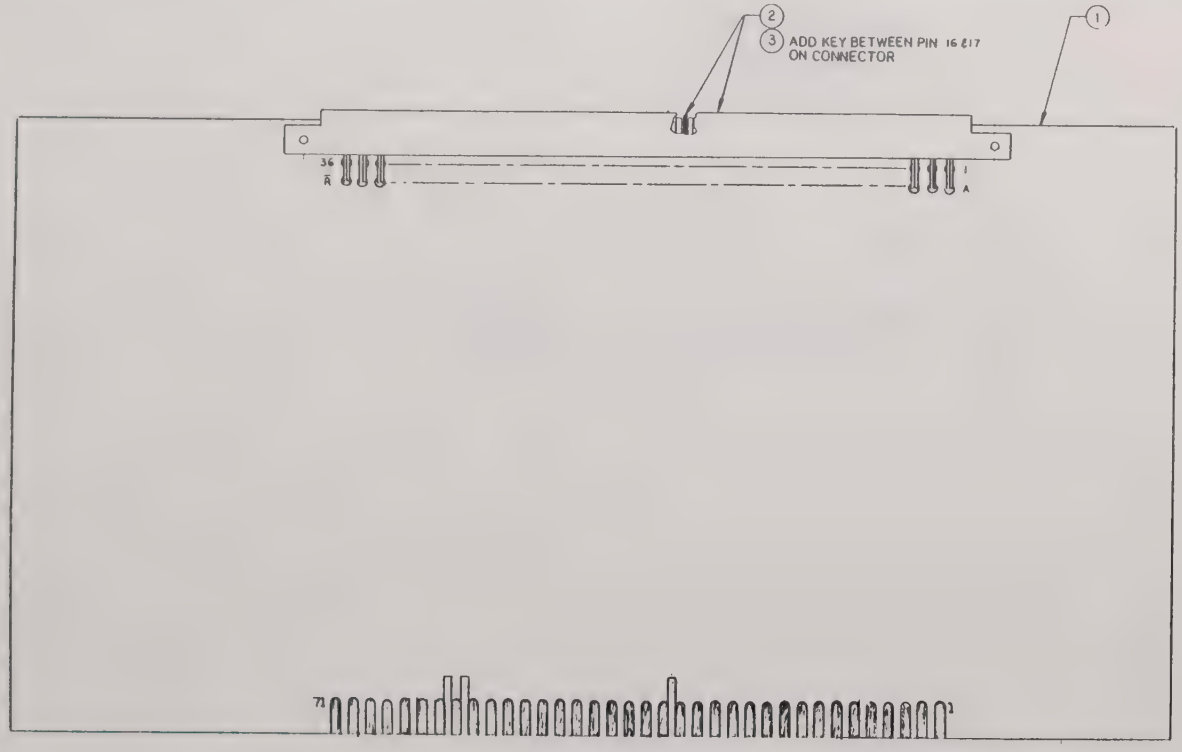

1 ASSEMBLY PROCESSES & PROCEDURES TO CONFORM TO RACAL-DANA WORKMANSHIP STANDARD.

NOTES: UNLESS OTHERWISE SPECIFIED

PROPRIETARY NOTICE

THIS DOCUMENT AND THE TECHNICAL DATA HEREON DISCLOSED ARE PROPRIETARY TO DANA LABORATORIES INC. AND SHALL NOT WITHOUT EXPRESS WRITTEN PERMISSION OF DANA LABORATORIES INC BE USED RELEASED OR DISCLOSED IN WHOLE OR IN PART OR USED TO SOLICIT QUOTATIONS FROM A COMPETITIVE SOURCE OR USED FOR MANUFACTURE BY ANYONE OTHER THAN DANA LABORATORIES INC. THE INFORMATION HEREON HAS BEEN DEVELOPED AT PRIVATE EXPENSE AND MAY ONLY BE USED FOR PURPOSES OF ENGINEERING EVALUATION AND FOR INCORPORATION INTO TECHNICAL SPECIFICATIONS AND OTHER DOCUMENTS WHICH SPECIFY PROCUREMENT OF PRODUCTS FROM DANA LABORATORIES, INC.

PCB ASSY, EXT, CPU/CON

SIZE	CODE IDENT NO.	DWG NO.	REV
D	21793	404267	B

SCALE 2/1 SHEET 1 OF 2

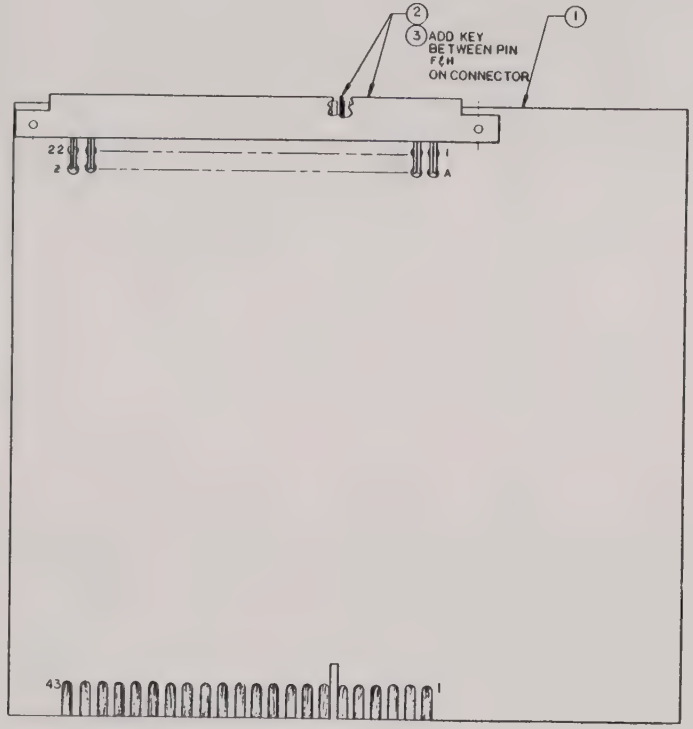

NOTES: UNLESS OTHERWISE SPECIFIED

1 ASSEMBLY PROCESSES & PROCEDURES TO CONFORM TO RACAL-DANA WORKMANSHIP STANDARD.

PCB ASSY, EXTNDR, GPIB

SIZE	CODE IDENT NO	DWG NO.	REV
D	21793	404268	B

SCALE 2/1 SHEET 1 OF 2

SECTION 11 PARTS LIST

11.1 This section contains lists of replaceable parts arranged in the order of the following subassemblies:

404261 201 Final Assy..... 11- 6
404260 202 Final Assy..... 11- 7
404262 205 Final Assy..... 11- 8

404251 201 Analyzer Assy..... 11- 9
404214 202 Analyzer Assy..... 11-11
404256 205 Analyzer Assy..... 11-13

404252 201 Chassis Assy..... 11-15
404215 202/205 Chassis Assy..... 11-17

401669 Keyboard Entry PCB..... 11-19

404263 Rear Panel Assy..... 11-21
404217 202/205 Rear Panel Assy.... 11-24

404264 201 Motherboard PCB..... 11-27
401668 202/205 Motherboard..... 11-40

401707 CPU PCB..... 11-53
401661 CPU PCB (used on earlier models)..... 11-58

401664 Control PCB..... 11-62

404265 201 Channel A/B Input PCB.. 11-67
401660 202/205 Channel X/Y Input PCB..... 11-71
404212 202/205 Channel Z Input PCB 11-76

404298 Opt 07 Univ. 8 Bit Adaptor..... 11-79

404248 Opt 08 8 Bit uP Assy..... 11-80
404220 8 Bit uP Probe Assy..... 11-81
401673 8 Bit uP Probe PCB Assy.... 11-82
404249 40 Pin Socket Module Assy.. 11-84
401687 40 Pin Socket Module PCB Assy..... 11-85

404225 Opt 48 GPIB Analyzer Assy.. 11-86
404224 GPIB Analyzer Probe Assy... 11-87
401678 GPIB Anlyzr Probe PCB Assy 11-88

404223 Opt 49 Word Generator Assy 11-89
401663 Word Generator PCB Assy.... 11-90
(Std. on 205, Opt. on 202)
404222 Word Generator Probe Assy.. 11-92
401675 Word Generator Probe PCB... 11-93

404229 Opt 50 Non-Vol Assy..... 11-95
401684 PCB Non-Vol Assy..... 11-96
(Std. on 205, Opt. on 202)

404300 Opt 55 GPIB Interface Assy 11-100
404226 Opt 55 GPIB Interface Assy (used on earlier models)... 11-101
401666 Interface PCB Assy..... 11-102

404299 Opt 68 6800 Series Dedicated Kit..... 11-105
404240 Opt 68 6800 Series Dedicated Kit (used on earlier models)..... 11-106
404238 6800/6802 Adaptor Assy..... 11-107
401685 6800/6802 PCB Assy..... 11-108
404239 6809 Adaptor Assy..... 11-109
401686 6809 PCB Assy..... 11-110

404232 Opt 71 100, 120, 220, 240 V Assy..... 11-111

404297 Opt 80 8080/8085 Dedicated Kit Assy..... 11-112
404242 Opt 80 8080/8085 Dedicated Kit Assy (used on earlier models)..... 11-113
404230 8080 Opt Adaptor Assy..... 11-114
401676 8080 Adaptor PCB Assy..... 11-115
404241 8085 Opt Adaptor Assy..... 11-116
401677 8085 Adaptor PCB Assy..... 11-117

404302 Opt Z80 Disassembler Kit... 11-118
404301 Opt Z80 Disassembler Kit (used on earlier models)... 11-119
404296 Z80 uP Probe Assy..... 11-120
401708 Z80 PCB Probe Assy..... 11-121

404237 Opt 90 Variable Threshold Probe Assy..... 11-124

401671 Variable Threshold Probe
PCB Assy..... 11-124
(Std. on 202/205, Opt. on 201)

404227 Opt 91 Fixed Threshold
Probe Assy..... 11-130
401670 Fixed Threshold Probe
PCB Assy..... 11-131
(Std. on 201, Opt. on 202/205)

404243 Extender Board-ABC/WG..... 11-133
404267 Extender Board-CPU/CON..... 11-134
404268 Extender Board-GPIB..... 11-135

404182 Rack Mount Kit (7")..... 11-136

11.2 Manufacturers are identified by FSC numbers listed in Table 11-1, "List of Suppliers". The code numbers are from the Federal Supply Code for Manufacturers Cataloging Handbooks H4-1, H4-2, and their supplements.

Table 11.1 - List of Suppliers

FSC	NAME
00779	AMP, INC. HARRISBURG, PA
01121	ALLEN BRADLEY CO. MILWAUKEE, WI
01295	TEXAS INSRUMENTS, INC. DALLAS, TX
02111	SPECTROL ELECTRONICS CORP. CITY OF INDUSTRY, CA
02660	AMPHENOL CORP. BROADVIEW, IL
03508	GENERAL ELECTRIC CO. (SEMI-CONDUCTOR PRODUCTS DIV.) ELECTRONICS PARK, SYRACUSE, NY
04222	AEROVOX CORP. (HI-Q DIV.) MYRTLE BEACH, SC
04713	MOTOROLA, INC. (SEMI-CONDUCTOR PRODUCTS DIV.) PHOENIX, AZ
05245	CORCOM, INC. CHICAGO, IL
05397	UNION CARBIDE CORP. (MATERIALS SYSTEMS DIV.) CLEVELAND, OH
05972	LOCTITE CORP. HARTFORD, CT
05574	VIKING INDUSTRIES, INC. CHATSWORTH, CA
06383	PANDUIT CORP. TINLEY PARK, IL

FSC	NAME
06540	AMATOM ELECTRONIC HARDWARE NEW ROCHELLE, NY
06776	ROBINSON NUGENT INC. NEW ALBANY, IN
07263	FAIRCHILD (SEMI-CONDUCTOR DIV.) MOUNTAIN VIEW, CA
09023	CORNELL-DUBILIER ELECTRONICS SANFORD, NC
11236	CTS OF BERNE, INC. BERNE, IN
11237	CTS KEENE, INC. PASO ROBLES, CA
12770	ARNOLD ENGINEERING FULLERTON, CA
12969	UNITRODE CORP. WATTERTOWN, MA
13103	THERMALLOY, INC. DALLAS, TX
13571	ELECTRONIC RESEARCH CO. OVERLAND PARK, KS
17474	TRANEX, INC. MOUNTAIN VIEW, CA
17856	SILICONIX, INC. SANTA CLARA, CA
18324	SIGNETICS CORP. SUNNYVALE, CA
18565	CHOMERICS, INC. WOBURN, MA

Table 11.1 - List of Suppliers (Continued)

FSC	NAME
19738	AVDEL CORP. TELEBORO, NJ
21793	RACAL-DANA INSTRUMENTS INC. IRVINE, CA
23880	STANFORD APPLIED ENGINEERING SANTA CLARA, CA
27014	NATIONAL SEMI-CONDUCTOR CORP. SANTA CLARA, CA
27777	VARO ELECTRAN DEVICES, INC. GARLAND, TX
29005	STORM PRODUCTS CO. LOS ANGELES, CA
30146	AP PRODUCTS INC. PLANESVILLE, OH
34335	ADVANCED MICRO DEVICES SUNNYVALE, CA
34553	AMPEREX/MEPCO-ELECTRA (COMPONENT DIV.) HAUPPAUGE, NY
34649	INTEL SANTA CLARA, CA
44655	OHMITE MFG. CO. SKOKIE, IL
46384	PENN ENG. & MFG. CORP. DOYLESTOWN, PA
50434	HEWLETT-PACKARD CO. (HPA DIV.) PALO ALTO, CA

FSC	NAME
51406	MURATA CORP. OF AMERICA EDMORE, MI
52072	CIRCUIT ASSY. CORP. COSTA MESA, CA
56289	SPRAGUE ELECTRIC CO. (PACIFIC DIV.) LOS ANGELES, CA
70903	BELDEN CORP. CHICAGO, IL
71400	BUSSMAN MFG. (DIV. MC GRAW & EDISON CO.) ST. LOUIS, MO
71450	CTS CORP. ELKHART, IN
71471	AEROVOX CORP. (CINEMA PLANT) MONCKS CORNER, SC
71590	CENTRALAB ELECTRONICS MILWAUKEE, WI
71785	TRW ELECTRONIC COMPONENTS (CINCH DIV.) ELK GROVE VILLAGE, IL
72982	ERIE TECHNOLOGICAL PRODUCTS, INC ERIE, PA
75915	LITTELFUSE, INC. DES PLAINES, IL
78189	ILLINOIS TOOL WORKS, INC. (SHAKEPROOF DIV.) ELGIN, IL
79727	C-W INDUSTRIES WARMINSTER, PA

Table 11.1 - List of Suppliers (Continued)

FSC	NAME
79963	ZIERICK MFG. CORP. NEW ROCHELLE, NY
80131	ELECTRONICS INDUSTRIES ASSOC. WASHINGTON, DC
81349	MILITARY SPECIFICATION
83330	HERMAN H. SMITH, INC. BROOKLYN, NY
86928	SEASTROM MFG. CO. GLENDALE, CA

FSC	NAME
91637	DALE ELECTRONICS, INC. COLUMBUS, NB
92912	BEL FUSE, INC. JERSEY CITY, NJ
95238	CONTINENTAL CONNECTOR WOODSIDE, NY
98291	SEALECTRO CORP. MAMARONECK, NY
99800	AMERICAN PRECISION INDUSTRIES, INC. (DELEVAN DIV.) EAST AURORA, NY

404261 - FINAL ASSEMBLY, MODEL 201 A

REF. DES.	RACAL-DANA P/N	FSC	MFG P/N	DESCRIPTION
1	404251	21793	404251	ANALYZER ASSY., LOGIC STATE
2	404227	21793	404227	PROBE ASSY., FIXED THRESHOLD (2 REQ'D)
4	600620	70903	KHS-7041	CABLE, POWER AC LINE IN
5	601088	21793	601088	CABLE ASSY., 20 PIN, TEST
6	980564	21793	980564	MANUAL, OPERATORS

404260 - FINAL ASSEMBLY, MODEL 202 B

REF. DES.	RACAL-DANA P/N	FSC	MFG P/N	DESCRIPTION
1	404214	21793	404214	ANALYZER ASSY., LOGIC
2	404237	21793	404237	PROBE ASSY., VARIABLE THRESHOLD (3 REQ'D)
3	454602	21793	454602	POUCH, ACCESSORY
4	600620	70903	KHS-7041	CABLE, POWER AC LINE IN
5	601088	21793	601088	CABLE ASSY., 20 PIN, TEST
6	980564	21793	980564	MANUAL, OPERATORS

REF. DES.	RACAL-DANA P/N	FSC	MFG P/N	DESCRIPTION
1	404256	21793	404256	SYSTEM ASSY., STATE ANALYSIS
2	404237	21793	404237	PROBE ASSY., VARIABLE THRESHOLD (3 REQ'D)
3	454602	21793	454602	POUCH, ACCESSORY
4	600620	70903	KHS-7041	CABLE, POWER AC LINE IN
5	601088	21793	601088	CABLE ASSY., 20 PIN, TEST
6	980564	21793	980564	MANUAL, OPERATORS
7	404222	21793	404222	PROBE ASSY., WORD GEN.

REF. DES.	RACAL-DANA P/N	FSC	MFG P/N	DESCRIPTION
J2	401664	21793	401664	PCB ASSY., CONTROL
J3	401661	21793	401661	PCB ASSY., CPU
J4	404265	21793	404265	PCB ASSY., CH A/B INPUT
J7	404265	21793	404265	PCB ASSY., CH A/B INPUT
6	404293	21793	404293	COVER ASSY., BOTTOM
7	404252	21793	404252	CHASSIS ASSY.
10	454352	21793	454352	COVER ASSY., TOP
11	404292	21793	404292	COVER ASSY., SIDE
13	454321	21793	454321	FOOT, REAR - (2 REQ'D)
15	404459	21793	404459	INSERT, CORNER, .700 - (2 REQ'D)
16	454521	21793	454521	OVERLAY, PANEL, FRONT
17	454622	21793	454622	OVERLAY, PANEL, REAR
20	454609	21793	454609	BRACKET, MTG., SUPPORT - (4 REQ'D)
21	454610	21793	454610	SUPPORT, P.C. BOARD - (2 REQ'D)
22	454464	21793	454464	GUIDE, P.C. BOARD, 1.50 LG - (7 REQ'D)
23	454465	21793	454465	GUIDE, P.C. BOARD, 1.50 LG, NOTCHED - (2 REQ'D)
24	610956	--	5165-N-.120	WASHER, NYLON, FLAT - (4 REQ'D)
25	610379	--	--	WASHER, NYLON, FLAT, 4BLK, .020TK - (4 REQ'D)
26	610910	78189	--	SCREW, PPH, 8 - 32 x .31 - (4 REQ'D)
27	610925	78189	--	SCREW, SELF TAP, 6 - 32 X 1 - (4 REQ'D)
28	610955	78189	1106-61-00	SCREW,METALLIC,6 - 32 X .312 - (5 REQ'D)

404251 - SYSTEM ASSEMBLY, STATE ANALYSIS, MODEL 201 (Continued) E

REF. DES.	RACAL-DANA P/N	FSC	MFG P/N	DESCRIPTION
29	610909	78189	--	SCREW, PPH, 6 - 32 X .50 (4 REQ'D)
34	454687	21793	454687	COVER, SIDE, WITH FEET
35	615062	--	--	SCREW, PPH, 6-32 X .625 - (4 REQ'D)
36	617103	--	--	WASHER, FLAT, #6, LIGHT SERIES - (4 REQ'D)
38	920888	21793	920888	LABEL, IDENTIFICATION
39	920963	--	0943	FOOT, BUMPER - (4 REQ'D)

404214 - ANALYZER ASSEMBLY, LOGIC J

REF. DES.	RACAL-DANA P/N	FSC	MFG P/N	DESCRIPTION
J2	401664	21793	401664	PCB ASSY., CONTROL
J3	401661	21793	401661	PCB ASSY., CPU
J4	401660	21793	401660	PCB ASSY., CH. A/B INPUT
J6	404212	21793	404212	PCB ASSY., CH. C INPUT
J7	401660	21793	401660	PCB ASSY., CH. A/B INPUT
6	404293	21793	404293	COVER ASSY., BOTTOM
7	404215	21793	404215	CHASSIS ASSY.
10	404218	21793	404218	COVER ASSY., TOP
11	404292	21793	404292	COVER ASSY., SIDE
13	454321	21793	454321	FOOT, REAR - (2 REQ'D)
15	454459	21793	454459	INSERT, CORNER - (2 REQ'D)
16	454617	21793	454617	OVERLAY, PANEL, FRONT
17	454522	21793	454522	OVERLAY, PANEL, REAR
18	454566	21793	454566	PLATE, BUTCH, GPIB
19	454608	21793	454608	PLATE, BUTCH, NON-VOL
20	454609	21793	454609	BRACKET, MTG, SUPPORT - (4 REQ'D)
21	454610	21793	454610	SUPPORT, P.C. BOARD - (2 REQ'D)
22	454464	21793	454464	GUIDE, P.C. BOARD, 1.50 LG - (7 REQ'D)
23	454465	21793	454465	GUIDE, P.C. BOARD, 1.50 LG, NOTCHED - (2 REQ'D)
24	610956	--	5165-N-.120	WASHER, FLAT, NYLON - (4 REQ'D)
25	610379	--	--	WASHER, NYLON, FLAT, 4 BLK, .020TK - (4 REQ'D)

404214 - ANALYZER ASSEMBLY, LOGIC (Continued) J

REF. DES.	RACAL-DANA P/N	FSC	MFG P/N	DESCRIPTION
26	610910	78189	--	SCREW, PPH, 8-32 X .31 - (6 REQ'D)
27	610925	78189	--	SCREW, SELF-TAP, 6-32 X 1 - (4 REQ'D)
28	610955	78189	1106-61-00	SCREW, METALLIC, 6-32 X .312 - (5 REQ'D)
29	610909	78189	--	SCREW, PANHEAD, PHILLIPS, 6-32 X .50 (4 REQ'D)
30	615014	--	--	MACHINE SCREW, PHILLIPS PANHEAD, 2-56 X .250 - (2 REQ'D)
31	617101	--	--	WASHER FLAT (LIGHT SERIES), #2 (2 REQ'D)
32	617126	--	--	WASHER, LOCK (LIGHT SERIES), #2 (2 REQ'D)
34	454687	21793	454687	COVER, SIDE, WITH FEET
35	615062	--	--	SCREW, PPH, 6-32 X .625 - (4 REQ'D)
36	617103	--	--	WASHER, FLAT, #6, LIGHT SERIES - (4 REQ'D)
38	920888	21793	920888	LABEL, IDENT
39	920963	--	0943	FOOT, BUMPER - (4 REQ'D)

404256 - SYSTEM ASSEMBLY, STATE ANALYSIS, MODEL 205 H

REF. DES.	RACAL-DANA P/N	FSC	MFG P/N	DESCRIPTION
J2	401664	21793	401664	PCB ASSY., CONTROL
J3	401661	21793	401661	PCB ASSY., CPU
J4	401660	21793	401660	PCB ASSY., CH. A/B INPUT
J5	401663	21793	401663	PCB ASSY., WORD GENERATOR
J6	404212	21793	404212	PCB ASSY., CH. C INPUT
J7	401660	21793	401660	PCB ASSY., CH. A/B INPUT
J9	401684	21793	401684	PCB ASSY., NON-VOL
J10	401666	21793	401666	PCB ASSY., GPIB INTERFACE
U9	230605	01295	P2816	IC - E^2 PROM, 2K X 8
U10	230605	01295	P2816	IC - E^2 PROM, 2K X 8
U11	230605	01295	P2816	IC - E^2 PROM, 2K X 8
6	404293	21793	404293	COVER ASSY., BOTTOM
7	404215	21793	404215	CHASSIS ASSY.
10	404218	21793	404218	COVER ASSY., TOP
11	404292	21793	404292	COVER ASSY., SIDE
13	454321	21793	454321	FOOT, REAR - (2 REQ'D)
15	454459	21793	454459	INSERT, CORNER - (2 REQ'D)
16	454618	21793	454618	OVERLAY, PANEL, FRONT
17	454522	21793	454522	OVERLAY, PANEL, REAR
19	454608	21793	454608	PLATE, BUTCH, NON-VOL
20	454609	21793	454609	BRACKET, MTG., SUPPORT - (4 REQ'D)
21	454610	21793	454610	SUPPORT, P.C. BOARD - (2 REQ'D)

REF. DES.	RACAL-DANA P/N	FSC	MFG P/N	DESCRIPTION
22	454464	21793	454464	GUIDE, P.C. BOARD, 1.50LG - (7 REQ'D)
23	454465	21793	454465	GUIDE, P.C. BOARD, 1.50LG, NOTCHED (2 REQ'D)
24	610956	--	5165-N-.120	WASHER, FLAT, NYLON - (4 REQ'D)
25	610379	--	--	WASHER, NYLON, FLAT, 4 BLK, .020 THK (4 REQ'D)
26	610910	78189	--	SCREW, PPH, 8-32 X .31 - (4 REQ'D)
27	610925	78189	--	SCREW, SELF TAP, 6-32 X 1 (4 REQ'D)
28	610955	78189	1106-61-00	SCREW, METALLIC, 6-32 X .312 (5 REQ'D)
29	610909	78189	--	SCREW, PPH, 6-32 X .50 (4 REQ'D)
30	615014	--	--	MACHINE SCREW, PHILLIPS PANHEAD, 2-56 X .250 - (2 REQ'D)
31	617101	--	--	WASHER FLAT (LIGHT SERIES), #2 - (2 REQ'D)
32	617126	--	--	LOCK WASHER (LIGHT SERIES), #2 - (2 REQ'D)
33	454687	21793	454687	COVER, SIDE, W/FEET
34	615058	--	--	SCREW, PPH, 6-32 X .312 - (2 REQ'D)
35	615062	--	--	SCREW, PPH, 6-32 X .625 - (4 REQ'D)
36	617103	--	--	WASHER, FLAT, #6 (4 REQ'D)
38	920888	21793	920888	LABEL, IDENTIFICATION
39	920963	21793	920963	FOOT, BUMPER - (4 REQ'D)

404252 - CHASSIS ASSEMBLY, MODEL 201 J

REF. DES.	RACAL-DANA P/N	FSC	MFG P/N	DESCRIPTION
S100	601058	--	1804.1121	SWITCH, PWR, DPDT
1	404264	21793	404264	PCB ASSY., MOTHERBOARD
2	401669	21793	401669	PCB ASSY., KEYBOARD ENTRY
3	404263	21793	404263	PANEL ASSY., REAR
4	454311	21793	454311	KEYBOARD, 4 X 6 - (2 REQ'D)
5	454613	21793	454613	SUPPORT, MTG BLOCK - (4 REQ'D)
6	454390	21793	454390	BLOCK, MOUNTING - (11 REQ'D)
7	454508	21793	454508	PANEL, FRONT
8	454509	21793	454509	SIDE PANEL, FINISHED
9	454567	21793	454567	GASKET, CRT
10	610813	52072	CA-16-200-DL	FASTENER, 16P SOCKET
11	454573	21793	454573	SUPPORT BAR, CRT - (2 REQ'D)
12	454598	21793	454598	KEYBOARD, 3 X 6
13	600961	06383	ACC19-A-C	CABLE CLIP, ADHESIVE MOUNT - (5 REQ'D)
15	500002	--	--	TUBING, SHRINK - .153ID
16	610909	78189	--	SCREW, PPH, 6-32 X .50 - (12 REQ'D)
17	610910	78189	--	SCREW, PPH, 8-32 X .31 - (2 REQ'D)
18	615043	--	--	MACHINE SCREW, PHILLIPS PANHEAD, 4-40 X .312 - (8 REQ'D)
19	610955	78189	1106-61-00	SCREW, METALLIC, 6-32 X .312 (7 REQ'D)
20	610956	--	5165-N-.120	WASHER, FLAT, NYLON - (2 REQ'D)
21	615062	--	--	MACHINE SCREW, PHILLIPS PANHEAD, 6-32 X .625 - (12 REQ'D)

404252 - CHASSIS ASSEMBLY, MODEL 201 (Continued) J

REF. DES.	RACAL-DANA P/N	FSC	MFG P/N	DESCRIPTION
22	617102	--	--	WASHER FLAT (LIGHT SERIES), #4 (8 REQ'D)
23	617127	--	--	LOCK WASHER (LIGHT SERIES), #4 (8 REQ'D)
24	920911	21793	920911	DISPLAY, TUBE, CRT 7", MOD
25	630018	06540	8250-A-0632-1B	STANDOFF, 6-32 X 5 3/4 L (3 REQ'D)
27	454463	21793	454463	GUIDE, PCB, .5LG - (3 REQ'D)
28	617079	--	--	LOCK WASHER, INTERNAL, #6 - (12 REQ'D)
30	454685	21793	454685	PANEL, SIDE, W/FEET
32	454701	21793	454701	SPACER, KEYBOARD, 3 X 6
33	454702	21793	454702	SPACER, KEYBOARD, 4 X 6 - (2 REQ'D)

404215 - CHASSIS ASSEMBLY L

REF. DES.	RACAL-DANA P/N	FSC	MFG P/N	DESCRIPTION
S100	601058	--	1804.1121	SWITCH, PWR, DPDT
1	401668	21793	401668	PCB ASSY, MOTHERBOARD
2	401669	21793	401669	PCB ASSY, KEYBOARD ENTRY
3	404217	21793	404217	PANEL ASSY, REAR
4	454311	21793	454311	KEYBOARD, 4 X 6 - (2 REQ'D)
5	454613	21793	454613	SUPPORT, MTG BLOCK - (4 REQ'D)
6	454390	21793	454390	BLOCK, MOUNTING - (11 REQ'D)
7	454508	21793	454508	PANEL, FRONT
8	454509	21793	454509	SIDE PANEL, FINISHED
9	454567	21793	454567	GASKET, CRT
10	610813	52072	CA-16-200-DL	FASTENER, 16P SOCKET
11	454573	21793	454573	SUPPORT BAR, CRT - (2 REQ'D)
12	454598	21793	454598	KEYBOARD, 3 X 6
13	600961	06383	ACC19-A-C	CABLE CLIP, ADHESIVE MOUNT - (5 REQ'D)
15	500002	--	--	TUBING, SHRINK - .153ID
16	610909	78189	--	SCREW, PPH, 6-32 X .50 - (12 REQ'D)
17	610910	78189	--	SCREW, PPH, 8-32 X .31 - (2 REQ'D)
18	615043	--	--	MACHINE SCREW, PHILLIPS PANHEAD 4-40 X .312 - (8 REQ'D)
19	610955	78189	1106-61-00	SCREW METALLIC, 6-32 X .312 - (7 REQ'D)
20	610956	--	5165-N-.120	WASHER, FLAT, NYLON - (2 REQ'D)
21	615062	--	--	MACHINE SCREW, PHILLIPS PANHEAD, 6-32 X .625 - (12 REQ'D)

REF. DES.	RACAL-DANA P/N	FSC	MFG P/N	DESCRIPTION
22	617102	--	--	WASHER FLAT (LIGHT SERIES), #4 (8 REQ'D)
23	617127	--	--	WASHER LOCK (LIGHT SERIES), #4 (8 REQ'D)
24	920911	21793	920911	DISPLAY, TUBE, CRT 7", MOD
25	630018	06540	8250-A-0632-1B	STANDOFF, 6-32 X 5 3/4 L - (3 REQ'D)
27	454463	21793	454463	GUIDE, PCB, .5 LG - (3 REQ'D)
28	617079	--	--	WASHER LOCK, INTERNAL, #6 - (12 REQ'D)
30	454685	21793	454685	PANEL, SIDE, W/FEET
32	454701	21793	454701	SPACER, KEYBOARD, 3 X 6
33	454702	21793	454702	SPACER, KEYBOARD, 4 X 6 - (2 REQ'D)

401669 - PCB ASSEMBLY, KEYBOARD ENTRY D

REF. DES.	RACAL-DANA P/N	FSC	MFG P/N	DESCRIPTION
C5	100017	56289	C023B101F103M	CAP - CERAM - .01MFD - 100V - 20%
C6	100017	56289	C023B101F103M	CAP - CERAM - .01MFD - 100V - 20%
C7	100017	56289	C023B101F103M	CAP - CERAM - .01MFD - 100V - 20%
CR1	210071	50434	HP5082-4650	LAMP, HI EFFICIENCY, RED - SOLID STATE
CR2	210071	50434	HP5082-4650	LAMP, HI EFFICIENCY, RED - SOLID STATE
CR4	210071	50434	HP5082-4650	LAMP, HI EFFICIENCY, RED - SOLID STATE
CR5	210071	50434	HP5082-4650	LAMP, HI EFFICIENCY, RED - SOLID STATE
CR6	210071	50434	HP5082-4650	LAMP, HI EFFICIENCY, RED - SOLID STATE
KYBD1	454599	21793	454599	SWITCH MATRIX, PB 4 X 6
KYBD2	600958	01295	11KS120	SWITCH, PUSHBUTTON
KYBD3	600958	01295	11KS120	SWITCH, PUSHBUTTON
R5	000472	81349	RC07GF472J	RES - CARBON - 4.7K - 5% - 1/4W
TP11	600786	00779	1-87022-0	POST, MACHINE APPLIED STRIP
TP14	600786	00779	1-87022-0	POST, MACHINE APPLIED STRIP
TP19	600786	00779	1-87022-0	POST, MACHINE APPLIED STRIP
TP20	600786	00779	1-87022-0	POST, MACHINE APPLIED STRIP
TP21	600786	00779	1-87022-0	POST, MACHINE APPLIED STRIP
U3	230073	01295	7405	IC - CERAM - HEX INVERTER
U4	230073	01295	7405	IC - CERAM - HEX INVERTER
U5	230386	27014	74LS273	IC - CERAM - HEX INVERTER

REF. DES.	RACAL-DANA P/N	FSC	MFG P/N	DESCRIPTION
U6	230619	01295	SN74LS368	IC - HEX, TRI-STATE INV. BUFFER
U7	230073	01295	7405	IC - CERAM - HEX INVERTER
U8	230366	27014	DM74LS174N	IC - CERAM - HEX INVERTER
U9	230366	27014	DM74LS174N	IC - CERAM - HEX INVERTER
U10	230368	27014	74LS138	IC
Z1	080023	11236	750-81-R4.7KOHM	RES- CERMET - 4.7K - NETWORK - 8P,7R - 2%
Z2	080022	11236	760-3-R220OHM	RES - CERMET - 220 OHM - NETWORK - 14P,7R - 2%
13	411669	21793	411669	PC BOARD, KEYBOARD ENTRY (UNSTUFFED)
18	600937	52072	CA-D-P02-26-1-DC-006	CABLE ASSEMBLY
22	453687	--	--	RETAINER, TRANSFORMER, FOAM - (9 REQ'D)
32	610982	--	--	WASHER, FLAT, #2 X .125 - (12 REQ'D)
33	920008	21793	920008	CEMENT

REF. DES.	RACAL-DANA P/N	FSC	MFG P/N	DESCRIPTION
B200	920945	--	141LT2282	FAN, 75 CFM - 4 1/2 X 1 1/2
C200	110206	56289	2D3U025V3C	CAP - ELECT - 20,000 MFD - 25V
C201	100111	71471	HVD6-2KV	CAP - CERAM - .01 MFD - 2000V
C202	100111	71471	HVD6-2KV	CAP - CERAM - .01 MFD - 2000V
C203	100111	71471	HVD6-2KV	CAP - CERAM - .01 MFD - 2000V
C204	100017	56289	C023B101F103M	CAP - CERAM - .01 MFD - 100V
CR200	230594	27777	VH148	IC - FULL WAVE RECT. BRIDGE
F200	920004	21793	920004	FUSE - 2 AMP
J204	600795	95238	6J1	CONN - VOLTAGE SELECTING 7 FUSED
J206	600808	02660	31-010	CONN - BNC
R200	001261	81349	RC20GF202J	RES - CARBON - 2K - 5% - 1/2W
T200	300100	17474	--	TRANSFORMER, POWER, SOLID-STATE
8	454461	21793	454461	GUIDE, PC BOARD, 3" - (3 REQ'D)
9	454511	21793	454511	PANEL, REAR (BLANK)
11	454512	21793	454512	HOUSING, FILTER
12	454513	21793	454513	RETAINER, AIR FILTER
13	454590	21793	454590	BRKT, STIFFENER, XMFR
14	454592	21793	454592	BOOT, CONN. INSULATOR
16	454596	21793	454596	FILTER, AIR
17	500002	--	--	TUBING, SHRINK - .153 ID

REF. DES.	RACAL-DANA P/N	FSC	MFG P/N	DESCRIPTION
18	500025	--	--	WIRE, TEFLON COATED, STRANDED, 20 GA, BLK
19	500218	29005	SLV-105	TUBING, .166 ID, BLK
21	500116	--	--	WIRE, TEFLON COATED, STRANDED, 20 GA, RED
22	500118	--	--	WIRE, TEFLON COATED, STRANDED 20 GA, BLUE
23	500119	--	--	WIRE, TEFLON COATED, STRANDED, 20 GA, YEL
24	500132	--	--	WIRE, TEFLON COATED, STRANDED, TWISTED PAIR, 24 GA
25	524111	--	--	WIRE, TEFLON COATED, STRANDED, 24 GA, BRN
26	500214	70903	94319-BRN	WIRE, TEFLON COATED, 18 GA, BRN
27	500215	70903	83009-BRN	WIRE, TEFLON COATED, STRANDED, 18 GA, GRN W/YELLOW STRIPE
28	500216	70903	94314-BLU	WIRE, TEFLON COATED, STRANDED, 18 GA, BLUE
29	501376	--	--	TUBING, TEFLON, 20 GA
30	524666	--	--	WIRE, TEFLON, STRANDED, 24 GA, GRN
31	600022	83330	1416-6	LUG, SOLDER
32	600026	83330	1485-10	LUG, SOLDER - (2 REQ'D)
33	600745	00779	60196-3	TERMINAL, RECEPTACLE - (4 REQ'D)
35	600978	00779	87309-3	RECEPTACLE, WIRE, CRIMP - (2 REQ'D)
37	600961	06383	ACC19-A-C	CABLE CLIP, ADHESIVE MOUNT - (4 REQ'D)
38	601022	00779	2-350800-2	TERMINAL, RECEPT. - (4 REQ'D)
39	601049	00779	2-350804-2	TERMINAL, INSULATED, RECEPT. - (9 REQ'D)

REF. DES.	RACAL-DANA P/N	FSC	MFG P/N	DESCRIPTION
43	601086	56289	4586-48	CLAMP, 2" DIA, CAP
44	601089	79963	123	LUG, SOLDER, #10 - (2 REQ'D)
47	610777	--	T18R	CABLE TIE
48	615060	--	--	MACHINE SCREW, PHILLIPS PANHEAD, 6-32 X .438 - (4 REQ'D)
49	615089	--	--	MACHINE SCREW, PHILLIPS PANHEAD 10-32 X .375 - (4 REQ'D)
50	615061	--	--	MACHINE SCREW, PHILLIPS PANHEAD, 6-32 X .500 - (4 REQ-D)
51	615084	--	--	MACHINE SCREW, PHILLIPS PANHEAD, 8-32 X 2.000 - (2 REQ'D)
52	617005	--	--	HEX NUT (STD.), 6-32 - (2 REQ'D)
53	617006	--	--	HEX NUT (STD.), 8-32 - (3 REQ'D)
54	617007	--	--	HEX NUT (STD.), 10-32 - (4 REQ'D)
57	617103	--	--	WASHER, FLAT (LIGHT SERIES), #6 - (5 REQ'D)
58	617104	--	--	WASHER, FLAT (LIGHT SERIES), #8 - (3 REQ'D)
59	617105	--	--	WASHER, FLAT (LIGHT SERIES), #10 - (4 REQ'D)
62	617128	--	--	LOCK WASHER (LIGHT SERIES), #6 - (5 REQ'D)
63	617129	--	--	LOCK WASHER (LIGHT SERIES), #8 - (3 REQ'D)
64	617054	--	--	WASHER, LOCK, EXTERNAL, #10 - (4 REQ'D)
67	920469	21793	920469	COMP, THERMAL

REF. DES.	RACAL-DANA P/N	FSC	MFG P/N	DESCRIPTION
B200	920945	--	141LT2282	FAN, 75 CFM, 4 1/2 X 1 1/2
C200	110206	56289	203U025V3C	CAP - ELECT - 20,000 MFD - 25V
C201	100111	71471	HVD6-2KV	CAP - CERAM - .01 MFD - 2000V
C202	100111	71471	HVD6-2KV	CAP - CERAM - .01 MFD - 2000V
C203	100111	71471	HVD6-2KV	CAP - CERAM - .01 MFD - 2000V
C204	100017	56289	C023B101F103M	CAP - CERAM - .01 MFD - 100V - 20%
CR200	230594	27777	VH148	IC - FULL WAVE RECT. BRIDGE
F200	920004	21793	920004	FUSE - 2 AMP
J201	600808	02660	31-010	CONN - BNC
J202	600808	02660	31-010	CONN - BNC
J203	600808	02660	31-010	CONN - BNC
J204	600795	05245	6J1	CONN - VOLTAGE SELECTING & FUSED
J206	600808	02660	31-010	CONN - BNC
R200	001261	81349	RC20GF202J	RES - CARBON - 2K - 5% - 1/2W
T200	300100	17474	--	TRANSFORMER, POWER, SOLID-STATE
8	454461	21793	454461	GUIDE, PC BOARD, 3" - (3 REQ'D)
9	454511	21793	454511	PANEL, REAR (BLANK)
11	454512	21793	454512	HOUSING, FILTER
12	454513	21793	454513	RETAINER, AIR FILTER
13	454590	21793	454590	BRKT, STIFFENER, XMFR
14	454592	21793	454592	BOOT, CONN. INSULATOR

REF. DES.	RACAL-DANA P/N	FSC	MFG P/N	DESCRIPTION
16	454596	21793	454596	FILTER, AIR
17	500002	--	--	TUBING, SHRINK - .153 ID
18	500025	--	--	WIRE, TEFLON COATED, STRANDED, 20 GA. BLK
19	500218	29005	SLU-105	TUBING, .166 ID, BLK
21	500116	--	--	WIRE, TEFLON COATED, STRANDED, 20 GA, RED
22	500118	--	--	WIRE, TEFLON COATED, STRANDED, 20 GA, BLUE
23	500119	--	--	WIRE, TEFLON COATED, STRANDED, 20 GA, YEL
24	500132	--	--	WIRE, TEFLON COATED, STRANDED, TWISTED PAIR, 24 GA
25	524111	--	--	WIRE, TEFLON COATED, STRANDED, 24 GA, BRN
26	500214	70903	94319-BRN	WIRE, TEFLON COATED, 18 GA BRN
27	500215	70903	83009-DARK	WIRE, TEFLON COATED, STRANDED, 18 GA, GRN W/YELLOW STRIPE
28	500216	70903	94314-BLU	WIRE, TELFON COATED, STRANDED, 18 GA, BLUE
29	501376	--	--	TUBING, TEFLON, 20 GA
30	524666	--	--	WIRE, TEFLON, STRANDED, 24 GA, GRN
31	600022	83330	1416-6	LUG, SOLDER
32	600026	83330	1485-10	LUG, SOLDER - (2 REQ'D)
33	600745	00779	60196-3	TERMINAL RECEPTACLE - (4 REQ'D)
35	600978	00779	87309-3	RECEPTACLE, WIRE, CRIMP - (8 REQ'D)
37	600961	06383	ACC19-A-C	CABLE CLIP, ADHESIVE MOUNT - (3 REQ'D)
38	601022	00779	2-350800-2	TERMINAL, RECEPT. - (4 REQ'D)

REF. DES.	RACAL-DANA P/N	FSC	MFG P/N	DESCRIPTION
39	601049	00779	2-350804-2	TERMINAL, INSULATED, RECEPT. - (9 REQ'D)
43	601086	56289	4586-48	CLAMP, 2" DIA, CAP
44	601089	79963	123	LUG, SOLDER, #10 - (2 REQ'D)
47	610777	--	T18R	CABLE TIE
48	615060	--	--	MACHINE SCREW, PHILLIPS PANHEAD, 6-32 X .438 - (4 REQ'D)
49	615089	--	--	MACHINE SCREW, PHILLIPS PANHEAD, 10-32 X .375 - (4 REQ'D)
50	615061	--	--	MACHINE SCREW, PHILLIPS PANHEAD, 6-32 X .500 - (4 REQ'D)
51	615084	--	--	MACHINE SCREW, PHILLIPS PANHEAD, 8-32 X 2.000 - (2 REQ'D)
52	617005	--	--	HEX NUT (STD.), 6-32 - (2 REQ'D)
53	617006	--	--	HEX NUT (STD.), 8-32 - (3 REQ'D)
54	617007	--	--	HEX NUT (STD.), 10-32 - (4 REQ'D)
57	617103	--	--	WASHER FLAT (LIGHT SERIES), #6 - (5 REQ'D)
58	617104	--	--	WASHER FLAT (LIGHT SERIES), #8 - (3 REQ'D)
59	617105	--	--	WASHER FLAT (LIGHT SERIES), #10 - (4 REQ'D)
62	617128	--	--	WASHER LOCK (LIGHT SERIES), #6 - (5 REQ'D)
63	617129	--	--	WASHER LOCK (LIGHT SERIES), #8 - (3 REQ'D)
64	617054	--	--	WASHER, LOCK, EXTERNAL, #10 - (4 REQ'D)
67	920469	21793	920469	COMP, THERMAL

REF. DES.	RACAL-DANA P/N	FSC	MFG P/N	DESCRIPTION
C2	100024	72982	5815-000Y5U104Z	CAP - CERAM - .1 MFD - 25V
C3	100024	72982	5815-000Y5U104Z	CAP - CERAM - .1 MFD - 25V
C4	100024	72982	5815-000Y5U104Z	CAP - CERAM - .1 MFD - 25V
C5	110126	05397	T368B685M035AS	CAP - TANTA - 6.8 MFD - 35V - 20%
C6	100024	72982	5815-000Y5U104Z	CAP - CERAM - .1 MFD - 25V
C7	100024	72982	5815-000Y5U104Z	CAP - CERAM - .1 MFD - 25V
C8	100024	72982	5815-000Y5U104Z	CAP - CERAM - .1 MFD - 25V
C9	100024	72982	5815-000Y5U104Z	CAP - CERAM - .1 MFD - 25V
C10	100024	72982	5815-000Y5U104Z	CAP - CERAM - .1 MFD - 25V
C11	100024	72982	5815-000Y5U104Z	CAP - CERAM - .1 MFD - 25V
C12	110126	05397	T368B685M035AS	CAP - TANTA - 6.8 MFD - 35V - 20%
C13	100024	72982	5815-000Y5U104Z	CAP - CERAM - .1 MFD - 25V
C14	100024	72982	5815-000Y5U104Z	CAP - CERAM - .1 MFD - 25V
C15	110163	05397	T368B475M035AS	CAP - TANTA - 4.7 MFD - 35V - 20%
C16	100024	72982	5815-000Y5U104Z	CAP - CERAM - .1 MFD - 25V
C17	100024	72982	5815-000Y5U104Z	CAP - CERAM - .1 MFD - 25V
C18	110163	05397	T368B475M035AS	CAP - TANTA - 4.7 MFD - 35V - 20%
C19	110036	34553	ET220X063A5	CAP - ELECT - 22 MFD - 63V
C20	100024	72982	5815-000Y5U104Z	CAP - CERAM - .1 MFD - 25V
C21	100024	72982	5815-000Y5U104Z	CAP - CERAM - .1 MFD - 25V
C22	100024	72982	5815-000Y5U104Z	CAP - CERAM - .1 MFD - 25V
C23	110163	05397	T368B475M035AS	CAP - TANTA - 4.7 MFD - 35V - 20%
C24	100024	72982	5815-000Y5U104Z	CAP - CERAM - .1 MFD - 25V

REF. DES.	RACAL-DANA P/N	FSC	MFG P/N	DESCRIPTION
C25	100024	72982	5815-000Y5U104Z	CAP - CERAM - .1 MFD - 25V
C26	100024	72982	5815-000Y5U104Z	CAP - CERAM - .1 MFD - 25V
C27	110205	56289	562U6R3NIL	CAP - ELECT - 5600 MFD - 6.3V
C28	110203	56289	941U025JIL	CAP - ELECT - 940 MFD - 25V
C29	110204	56289	302U025BBI	CAP - ELECT - 3000 MFD - 25V
C30	110163	05397	T368B475M035AS	CAP - TANTA - 4.7 MFD - 35V - 20%
C31	100024	72982	5815-000Y5U104Z	CAP - CERAM - .1 MFD - 25V
C32	100024	72982	5815-000Y5U104Z	CAP - CERAM - .1 MFD - 25V
C33	100024	72982	5815-000Y5U104Z	CAP - CERAM - .1 MFD - 25V
C35	100024	72982	5815-000Y5U104Z	CAP - CERAM - .1 MFD - 25V
C36	100024	72982	5815-000Y5U104Z	CAP - CERAM - .1 MFD - 25V
C37	100017	56289	C023B101F103M	CAP - CERAM - .01 MFD - 100V - 20%
C39	100024	72982	5815-000Y5U104Z	CAP - CERAM - .1 MFD - 25V
C40	100080	56289	C023A101L503M	CAP - CERAM - .05 MFD - 100V - 20%
C41	100024	72982	5815-000Y5U104Z	CAP - CERAM - .1 MFD - 25V
C42	100024	72982	5815-000Y5U104Z	CAP - CERAM - .1 MFD - 25V
C43	100024	72982	5815-000Y5U104Z	CAP - CERAM - .1 MFD - 25V
C44	110163	05397	T368B475M035AS	CAP - TANTA - 4.7 MFD - 35V - 20%
C45	100024	72982	5815-000Y5U104Z	CAP - CERAM - .1 MFD - 25V
C46	100024	72982	5815-000Y5U104Z	CAP - CERAM - .1 MFD - 25V
C47	121092	09023	WMF1D22	CAP - MYLAR - .0022 MFD - 100V - 10%
C48	100024	72982	5815-000Y5U104Z	CAP - CERAM - .1 MFD - 25V
C49	120109	09023	W1F1S18	CAP - MYLAR - .018 MFD - 100V - 10%

REF. DES.	RACAL-DANA P/N	FSC	MFG P/N	DESCRIPTION
C50	100024	72982	5815-000Y5U104Z	CAP - CERAM - .1 MFD - 25V
C51	110163	05397	T368B475M035AS	CAP - TANTA - 4.7 MFD - 35V - 20%
C52	100017	56289	C023B101F103M	CAP - CERAM - .01 MFD - 100V - 20%
C53	100017	56289	C023B101F103M	CAP - CERAM - .01 MFD - 100V - 20%
C54	100017	56289	C023B101F103M	CAP - CERAM - .01 MFD - 100V - 20%
C55	100017	56289	C023B101F103M	CAP - CERAM - .01 MFD - 100V - 20%
C56	100062	72982	8121-100-W5R0-103K	CAP - CERAM - .01 MFD - 100V - 10%
C57	100024	72982	5815-000Y5U104Z	CAP - CERAM - .1 MFD - 25V
C58	100024	72982	5815-000Y5U104Z	CAP - CERAM - .1 MFD - 25V
C59	100024	72982	5815-000Y5U104Z	CAP - CERAM - .1 MFD - 25V
C60	100024	72982	5815-000Y5U104Z	CAP - CERAM - .1 MFD - 25V
C61	100024	72982	5815-000Y5U104Z	CAP - CERAM - .1 MFD - 25V
C62	100024	72982	5815-000Y5U104Z	CAP - CERAM - .1 MFD - 25V
C63	100024	72982	5815-000Y5U104Z	CAP - CERAM - .1 MFD - 25V
C64	100062	72982	8121-100-W5R0-103K	CAP - CERAM - .01 MFD - 100V - 10%
C65	100062	72982	8121-100-W5R0-103K	CAP - CERAM - .01 MFD - 100V - 10%
C66	100062	72982	8121-100-W5R0-103K	CAP - CERAM - .01 MFD - 100V - 10%
C67	100062	72982	8121-100-W5R0-103K	CAP - CERAM - .01 MFD - 100V - 10%
C68	100062	72982	8121-100-W5R0-103K	CAP - CERAM - .01 MFD - 100V - 10%
C69	100062	72982	8121-100-W5R0-103K	CAP - CERAM - .01 MFD - 100V - 10%

REF. DES.	RACAL-DANA P/N	FSC	MFG P/N	DESCRIPTION
C70	100062	72982	8121-100-W5R0-103K	CAP - CERAM - .01 MFD - 100V - 10%
C71	100062	72982	8121-100-W5R0-103K	CAP - CERAM - .01 MFD - 100V - 10%
C72	100062	72982	8121-100-W5R0-103K	CAP - CERAM - .01 MFD - 100V - 10%
CR1	210004	81349	1N4004	DIODE - SILICO
CR2	210004	81349	1N4004	DIODE - SILICO
CR3	211083	81349	1N916B	DIODE - SILICO
CR4	211083	81349	1N916B	DIODE - SILICO
CR5	210004	81349	1N4004	DIODE - SILICO
E7	600977	79963	895	TAB - DISCONNECT
E8	600977	79963	895	TAB - DISCONNECT
E9	600977	79963	895	TAB - DISCONNECT
E10	600977	79963	895	TAB - DISCONNECT
E11	600977	79963	895	TAB - DISCONNECT
E12	600786	00779	1-87022-0	POST, MACHINE APPLIED STRIP
E13	600786	00779	1-87022-0	POST, MACHINE APPLIED STRIP
E14	600786	00779	1-87022-0	POST, MACHINE APPLIED STRIP
E15	600786	00779	1-87022-0	POST, MACHINE APPLIED STRIP
E16	600786	00779	1-87022-0	POST, MACHINE APPLIED STRIP
E17	600786	00779	1-87022-0	POST, MACHINE APPLIED STRIP
E18	600977	79963	895	TAB - DISCONNECT
E23	600786	00779	1-87022-0	POST, MACHINE APPLIED STRIP

REF. DES.	RACAL-DANA P/N	FSC	MFG P/N	DESCRIPTION
E24	600786	00779	1-87022-0	POST, MACHINE APPLIED STRIP
F1	920961	71400	GLH8	FUSE, 8A, NORMAL BLO
J1	920735	71785	133-51-02-006	SOCKET, IC - 16P
J2	601050	00779	1-583486-5	CONN, 36 DUAL POS, PCB LEAF CONNECTOR
J3	601050	00779	1-583486-5	CONN, 36 DUAL POS, PCB LEAF CONNECTOR
J4	601050	00779	1-583486-5	CONN, 36 DUAL POS, PCB LEAF CONNECTOR
J7	601050	00779	1-583486-5	CONN, 36 DUAL POS, PCB LEAF CONNECTOR
J10	600658	00779	2-583486-9	CONN - 22P
J100	601051	00779	102161-8	CONN, 34P, RT ANGLE, HEADER
J102	601051	00779	102161-8	CONN, 34P, RT ANGLE, HEADER
J200	601060	06776	IDH-20LP-SR3	CONN, 20P, RT ANGLE, HEADER
L1	600245	--	L-2007-1LP	JUMPER, INSULATED
L2	600245	--	L-2007-1LP	JUMPER, INSULATED
L3	310154	12770	A-206068-2	INDUCTOR, 0.68 MH, TOROID CORE WRAPPED
L4	310153	21793	310153	INDUCTOR, 65 UH, SW PWR SUPPLY
P11	601053	00779	583479-1	CONN, CRIMP, SNAP-IN
Q1	200196	81349	2N3568	TRANS - NPN
Q2	200277	03508	2N4991	TRANS - SB5
Q3	200278	04713	2N6504	TRANS - PUR SCR
Q4	200256	80131	2N3646	TRANS - FALLOUT
R1	000472	81349	RC07GF472J	RES - CARBON - 4.7K - 5% - 1/4W

REF. DES.	RACAL-DANA P/N	FSC	MFG P/N	DESCRIPTION
R2	000102	81349	RC07GF102J	RES - CARBON - 1K - 5% - 1/4W
R3	000101	81349	RC07GF101J	RES - CARBON - 100 OHM - 5% - 1/4W
R4	000202	81349	RC07GF202J	RES - CARBON - 2K - 5% - 1/4W
R5	030028	21793	030028	RES - WW - 15 OHM - 5% - 5W
R6	000561	81349	RC07GF561J	RES - CARBON - 560 OHM - 5% - 1/4W
R7	000100	81349	RC07GH100J	RES - CARBON - 100 OHM - 5% - 1/4W
R8	030027	21793	030027	RES - WW - .05 OHM - 5% - 10W
R9	010966	81349	RN55C1301F	METAL - 1.3K - 1% - 1/10W
R10	012087	81349	RN55C1212F	RES - METAL FILM - 12.1K - 1% - 1/10
R11	012096	81349	RN55C1210F	RES - METAL FILM - 121 OHM - 1%
R12	012084	81349	RN55C	RES - METAL FILM - 100 OHM - 1% - 1/10W
R15	010630	81349	RN55C9091F	RES - METAL - 9.09K - 1% - 1/10W
R17	010980	81349	RN55C4641F	RES - METAL FILM - 4.64K - 1% - 1/10
R18	000682	81349	RC07GF682J	RES - CARBON - 6.8K - 5% - 1/4W
R19	000472	81349	RC07GF472J	RES - CARBON - 4.7K - 5% - 1/4W
R20	012097	81349	RN55C4321F	RES - METAL FILM - 4.32K - 1%
R21	000100	81349	RC07GF100J	RES - CARBON - 10 OHM - 5% - 1/4W
R23	000105	81349	RC07GF105J	RES - CARBON - 1M - 5% - 1/4W
R24	000273	81349	RC07GF273J	RES - CARBON - 27K - 5% - 1/4W
R25	000273	81349	RC07GF273J	RES - CARBON - 27K - 5% - 1/4W
R26	000103	81349	RC07GF103J	RES - CARBON - 10K - 5% - 1/4W
R27	000201	81349	RC07GF201J	RES - CARBON - 200 OHM - 5% - 1/4W
R28	000202	81349	RC07GF202J	RES - CARBON - 2K - 5% - 1/4W

REF. DES.	RACAL-DANA P/N	FSC	MFG P/N	DESCRIPTION
R29	000682	81349	RC07GF682J	RES - CARBON - 6.8K - 5% - 1/4W
R30	000393	81349	RC07GF393J	RES - CARBON - 39K - 5% - 1/4W
R31	000334	81349	RC07GF334J	RES - CARBON - 330K - 5% - 1/4W
R32	001683	81349	RC20GF470J	RES - CARBON - 47 OHM - 5% - 1/2W
R33	000122	81349	RC07GF122J	RES - CARBON - 1.2K - 5% - 1/4W
R34	000101	81349	RC07GF101J	RES - CARBON - 100 OHM - 5% - 1/4W
R35	040196	11237	360T102B	POT - CERMET - 1K - 20%
R36	000202	81349	RC07GF202J	RES - CARBON - 2K - 5% - 1/4W
R37	001758	81349	RC32GF331J	RES - CARBON - 330 OHM - 5% - 1W
R41	000271	81349	RC07GF271J	RES - CARBON - 270 OHM - 5% - 1/4W
R42	000241	81349	RC07GF241J	RES - CARBON - 240 OHM - 5% - 1/4W
R43	000271	81349	RC07GF271J	RES - CARBON - 270 OHM - 5% - 1/4W
R44	000241	81349	RC07GF241J	RES - CARBON - 240 OHM - 5% - 1/4W
R45	000301	81349	RC07GF301J	RES - CARBON - 300 OHM - 5% - 1/4W
R46	000241	81349	RC07GF241J	RES - CARBON - 240 OHM - 5% - 1/4W
R47	000241	81349	RC07GF241J	RES - CARBON - 240 OHM - 5% - 1/4W
R48	000101	81349	RC07GF101J	RES - CARBON - 100 OHM - 5% - 1/4W
R49	000472	81349	RC07GF472J	RES - CARBON - 4.7K - 5% - 1/4W
TP1	600786	00779	1-87022-0	POST, MACHINE APPLIED STRIP
TP2	600786	00779	1-87022-0	POST, MACHINE APPLIED STRIP
TP3	600786	00779	1-87022-0	POST, MACHINE APPLIED STRIP
TP4	600786	00779	1-87022-0	POST, MACHINE APPLIED STRIP
TP5	600786	00779	1-87022-0	POST, MACHINE APPLIED STRIP

REF. DES.	RACAL-DANA P/N	FSC	MFG P/N	DESCRIPTION
TP6	600786	00779	1-87022-0	POST, MACHINE APPLIED STRIP
TP7	600786	00779	1-87022-0	POST, MACHINE APPLIED STRIP
TP8	600786	00779	1-87022-0	POST, MACHINE APPLIED STRIP
TP9	600786	00779	1-87022-0	POST, MACHINE APPLIED STRIP
TP10	600786	00779	1-87022-0	POST, MACHINE APPLIED STRIP
TP11	600786	00779	1-87022-0	POST, MACHINE APPLIED STRIP
TP12	600786	00779	1-87022-0	POST, MACHINE APPLIED STRIP
TP13	600786	00779	1-87022-0	POST, MACHINE APPLIED STRIP
TP14	600786	00779	1-87022-0	POST, MACHINE APPLIED STRIP
TP15	600786	00779	1-87022-0	POST, MACHINE APPLIED STRIP
TP16	600786	00779	1-87022-0	POST, MACHINE APPLIED STRIP
TP17	600786	00779	1-87022-0	POST, MACHINE APPLIED STRIP
TP18	600786	00779	1-87022-0	POST, MACHINE APPLIED STRIP
TP19	600786	00779	1-87022-0	POST, MACHINE APPLIED STRIP
TP20	600786	00779	1-87022-0	POST, MACHINE APPLIED STRIP
TP21	600786	00779	1-87022-0	POST, MACHINE APPLIED STRIP
TP22	600786	00779	1-87022-0	POST, MACHINE APPLIED STRIP
TP23	600786	00779	1-87022-0	POST, MACHINE APPLIED STRIP
TP24	600786	00779	1-87022-0	POST, MACHINE APPLIED STRIP
TP25	600786	00779	1-87022-0	POST, MACHINE APPLIED STRIP
TP26	600786	00779	1-87022-0	POST, MACHINE APPLIED STRIP
TP27	600786	00779	1-87022-0	POST, MACHINE APPLIED STRIP
TP28	600786	00779	1-87022-0	POST, MACHINE APPLIED STRIP

REF. DES.	RACAL-DANA P/N	FSC	MFG P/N	DESCRIPTION
TP29	600786	00779	1-87022-0	POST, MACHINE APPLIED STRIP
TP30	600786	00779	1-87022-0	POST, MACHINE APPLIED STRIP
TP31	600786	00779	1-87022-0	POST, MACHINE APPLIED STRIP
U1	230421	27014	DM81LS97N	IC
U2	230584	27014	74S64	IC - 4-WIDE AND NOR
U3	230630	07263	74F86PC	IC - EXCLUSIVE OR
U4	230583	27014	74S51	IC - DUAL 2 WIDE AND NOR
U5	230421	27014	DM81LS97N	IC
U6	230386	27014	74LS273	IC
U7	230584	27014	74S64	IC - 4-WIDE AND NOR
U8	230234	01295	SN74LS04N	IC - 14 DIP, HEX INVERTER
U10	230368	27014	74LS138	IC
U11	230368	27014	74LS138	IC
U12	230368	27014	74LS138	IC
U13	230421	27014	DM81LS97N	IC
U14	230421	27014	DM81LS97N	IC
U15	230386	27014	74LS273	IC
U16	230368	27014	74LS138	IC
U17	230073	01295	7405	IC - CERAM - HEX INVERTER
U18	230234	01295	SN74LS04N	IC - 14 DIP - HEX INVERTER
U19	230346	01295	74LS157	IC
U20	230576	04713	MC6845	IC - CRT CONTROLLER
U21	230630	07263	74F86PC	IC - EXCLUSIVE OR

REF. DES.	RACAL-DANA P/N	FSC	MFG P/N	DESCRIPTION
U22	230194	01295	SN74LS74N	IC - 14 DIP, DUAL D, FLIP-FLOP
U23	230346	01295	74LS157	IC
U24	230305	01295	SN74LS08	IC - QUAD, 2 INPUT AND GATES
U25	230194	01295	SN74LS74N	IC - 14 DIP, DUAL D, FLIP-FLOP
U26	230346	01295	74LS157	IC
U27	230422	34335	AM8304B	IC - OCTAL
U28	230301	04713	MC7905CP	IC - 3 TERM VOLTAGE REGULATOR, -5V @ 1 AMP
U29	230203	04713	MC7812CK	IC
U30	230615	34649	2716	IC - PROM, 2K X 8
U31	230537	21793	230537	IC - MEMORY - 2114 ROM
U32	230537	21793	230537	IC - MEMORY - 2114 ROM
U33	230306	01295	SN74LS02	IC - QUAD, 2 INPUT NOR GATES
U34	230568	12969	PIC645	IC - SWITCHING REGULATOR
U35	230547	27014	LM339N	IC - QUAD COMPARATOR
U37	230210	01295	SN74165N	IC
U38	230382	27014	74LS161AN	IC
U39	230211	01295	SN74161N	IC
U40	230211	01295	SN74161N	IC
U43	230569	21793	230569	IC - SWITCHING REG & PULSE MOD
U44	230580	27014	74S11	IC - TRIPLE 3 INPUT NAND
W2	601023	98291	026-4802	PLUG, JUMPER

REF. DES.	RACAL-DANA P/N	FSC	MFG P/N	DESCRIPTION
W3	601023	98291	026-4802	PLUG, JUMPER
W4	601023	98291	026-4802	PLUG, JUMPER
Z1	080004	11236	750-61-R4.7KOHM	RES - CERMET - 4.7K - NETWORK 6P,5R - 2%
Z2	080032	11236	750-100-R4.7KOHM	RES - CERMET - 4.7K - NETWORK 10P,9R
Z3	080004	11236	750-61-R4.7KOHM	RES - CERMET - 47K - NETWORK 6P,5R - 2%
Z4	080051	91637	MSP10C05-221/331G	RES - ARRAY - 10P, 16R - 220/330
Z5	080051	91637	MSP10C05-221/331G	RES - ARRAY - 10P, 16R - 220/330
Z6	080032	11236	750-100-R4.7KOHM	RES - CERMET - 4.7K - NETWORK - 10P, 9R
90	500022	21793	500022	BUSS WIRE - COPPER TRIMMED - 22GA
91	411668	21793	411668	PC BOARD, MOTHERBOARD (UNSTUFFED)
93	454601	21793	454601	HEATSINK, I.C. CASE MOUNT
94	500025	--	--	WIRE, TEFLON COATED, STRANDED, 20 GA, BLK
95	500052	--	--	WIRE, TEFLON COATED, STRANDED, 18 GA, BLK
96	500219	--	--	WIRE, COPPER W/VARNISH INSULATION, 18 GA
97	524000	--	--	WIRE, TEFLON, STRANDED, 20 GA, BLK
98	524111	--	--	WIRE, TEFLON, STRANDED, 24 GA, BRN
99	524333	--	--	WIRE, TEFLON, STRANDED, 24 GA, ORN
100	500132	--	--	WIRE, TEFLON COATED, STRANDED TWISTED PAIR, 24 GA
101	524444	--	--	WIRE, TEFLON, STRANDED, 24 GA, YEL
102	524666	--	--	WIRE, TEFLON, STRANDED, 24 GA, BLU

REF. DES.	RACAL-DANA P/N	FSC	MFG P/N	DESCRIPTION
108	600823	52072	40S-TSD-BD	SOCKET, DIP TYPE - 40P
110	500130	--	--	TUBING, TEFLON, THINWALL, CLEAR, 16 GA
111	601022	00779	2-350800-2	TERMINAL, RECEPT - (2 REQ'D)
112	601013	--	3223-07FR-05	HEATSINK INSULATOR, 7 MIL PLASTIC
115	501376	--	--	TUBING, TEFLON, 20 GA
118	601057	00779	583259-3	CONTACT, CRIMP, SNAP-IN - (5 REQ'D)
121	601074	23880	1250V	GUIDE - (9 REQ'D)
122	610533	46384	KF2-632	NUT, PRESS, SPLINE, 6-32 - (8 REQ'D)
123	610616	--	1247-11	SPACER, SWG 6-32 CL, .250 DIA - (5 REQ'D)
124	610752	--	--	SCREW, PPH, SELF TAP, 5-20, .375 LG (4 REQ'D)
126	610777	--	T18R	CABLE TIE
127	610851	18565	60-11-5791-1674	WASHER - INSUL - TIP 32, STYLE - BLUE (2 REQ'D)
128	610924	06540	9534B-B-140	SPACER, SWG, 1/4" OD, 140ID, .031L (7 REQ'D)
129	610947	86928	5607-73	WASHER, NYLON, #6 - (10 REQ'D)
131	610948	00779	530286-2	KEY, TWIN LEAF TYPE, POLARIZING (9 REQ'D)
132	615042	-	-	MACHINE SCREW, PHILLIPS PANHEAD, 4-40 X .250 - (9 REQ'D)
133	615057	-	-	MACHINE SCREW, PHILLIPS PANHEAD, 6-32 X .250 (3 REQ'D)
134	615060	-	-	MACHINE SCREW, PHILLIPS PANHEAD, 6-32 X .438 - (5 REQ'D)

REF. DES.	RACAL-DANA P/N	FSC	MFG P/N	DESCRIPTION
136	617102	-	-	WASHER, FLAT (LIGHT SERIES), #4 - (9 REQ'D)
137	617103	-	-	WASHER, FLAT (LIGHT SERIES), #6 - (3 REQ'D)
138	617127	-	-	WASHER, LOCK (LIGHT SERIES), #4 - (9 REQ'D)
139	617128	-	-	WASHER, LOCK (LIGHT SERIES), #6 - (7 REQ'D)
141	920469	21793	920469	COMP, THERMAL
142	920624	71785	133-59-02-063	SOCKET, IC - 24P - (2 REQ'D)
144	920971	75915	12208	FUSEHOLDER, P.C. MOUNT - (2 REQ'D)
148	920962	05972	242	LOCTITE, 242, MED STR.
149	920808	--	274	ADHESIVE
150	920841	52072	CA-18S-TSO-BC	SOCKET, SOLDER TAIL, 18 PIN

REF. DES.	RACAL-DANA P/N	FSC	MFG P/N	DESCRIPTION
C2	100024	72982	5815-000Y5U104Z	CAP - CERAM - .1 MFD - 25V
C3	100024	72982	5815-000Y5U104Z	CAP - CERAM - .1 MFD - 25V
C4	100024	72982	5815-000Y5U104Z	CAP - CERAM - .1 MFD - 25V
C5	110126	05397	T368B685M035AS	CAP - TANTA - 6.8 MFD - 35V - 20%
C6	100024	72982	5815-000Y5U104Z	CAP - CERAM - .1 MFD - 25V
C7	100024	72982	5815-000Y5U104Z	CAP - CERAM - .1 MFD - 25V
C8	100024	72982	5815-000Y5U104Z	CAP - CERAM - .1 MFD - 25V
C9	100024	72982	5815-000Y5U104Z	CAP - CERAM - .1 MFD - 25V
C10	100024	72982	5815-000Y5U104Z	CAP - CERAM - .1 MFD - 25V
C11	100024	72982	5815-000Y5U104Z	CAP - CERAM - .1 MFD - 25V
C12	110126	05397	T368B685M035AS	CAP - TANTA - 6.8 MFD - 35V - 20%
C13	100024	72982	5815-000Y5U104Z	CAP - CERAM - .1 MFD - 25V
C14	100024	72982	5815-000Y5U104Z	CAP - CERAM - .1 MFD - 25V
C15	110163	05397	T368B475M035AS	CAP - TANTA - 4.7 MFD - 35V - 20%
C16	100024	72982	5815-000Y5U104Z	CAP - CERAM - .1 MFD - 25V
C17	100024	72982	5815-000Y5U104Z	CAP - CERAM - .1 MFD - 25V
C18	110163	05397	T368B475M035AS	CAP - TANTA - 4.7 MFD - 35V - 20%
C19	110036	34553	ET220X063A5	CAP - ELECT - 22 MFD - 63V
C20	100024	72982	5815-000Y5U104Z	CAP - CERAM - .1 MFD - 25V
C21	100024	72982	5815-000Y5U104Z	CAP - CERAM -.1 MFD - 25V
C22	100024	72982	5815-000Y5U104Z	CAP - CERAM -.1 MFD - 25V
C23	110163	05397	T368B475M035AS	CAP - TANTA - 4.7 MFD - 35V - 20%
C24	100024	72982	5815-000Y5U104Z	CAP - CERAM - .1 MFD - 25V

REF. DES.	RACAL-DANA P/N	FSC	MFG P/N	DESCRIPTION
C25	100024	72982	5815-000Y5U104Z	CAP - CERAM - .1 MFD - 25V
C26	100024	72982	5815-000Y5U104Z	CAP - CERAM - .1 MFD - 25V
C27	110205	56289	562U6R3NIL	CAP - ELECT - 5600 MFD - 6.3V
C28	110203	56289	941U025JIL	CAP - ELECT - 940 MFD - 25V
C29	110204	56289	302U025BBI	CAP - ELECT - 3000 MFD - 25V
C30	110163	05397	T368B475M035AS	CAP - TANTA - 4.7 MFD - 35V - 20%
C31	100024	72982	5815-000Y5U104Z	CAP - CERAM - .1 MFD - 25V
C32	100024	72982	5815-000Y5U104Z	CAP - CERAM - .1 MFD - 25V
C33	100024	72982	5815-000Y5U104Z	CAP - CERAM - .1 MFD - 25V
C35	100024	72982	5815-000Y5U104Z	CAP - CERAM - .1 MFD - 25V
C36	100024	72982	5815-000Y5U104Z	CAP - CERAM - .1 MFD - 25V
C37	100017	56289	C023B101F103M	CAP - CERAM - .01 MFD - 100V - 20%
C39	100024	72982	5815-000Y5U104Z	CAP - CERAM - .1 MFD - 25V
C40	100080	56289	C023A101L503M	CAP - CERAM - .05 MFD - 100V - 20%
C41	100024	72982	5815-000Y5U104Z	CAP - CERAM - .1 MFD - 25V
C42	100024	72982	5815-000Y5U104Z	CAP - CERAM - .1 MFD - 25V
C43	100024	72982	5815-000Y5U104Z	CAP - CERAM - .1 MFD - 25V
C44	110163	05397	T368B475M035AS	CAP - TANTA - 4.7 MFD - 35V - 20%
C45	100024	72982	5815-000Y5U104Z	CAP - CERAM - .1 MFD - 25V
C46	100024	72982	5815-000Y5U104Z	CAP - CERAM - .1 MFD - 25V
C47	121092	09023	WMF1D22	CAP - MYLAR - .0022 MFD - 100V - 10%
C48	100024	72982	5815-000Y5U104Z	CAP - CERAM - .1 MFD - 25V
C49	120109	09023	W1F1S18	CAP - MYLAR - .018 MFD - 100V - 10%
C50	100024	72982	5815-000Y5U104Z	CAP - CERM - .1 MFD - 25V

REF. DES.	RACAL-DANA P/N	FSC	MFG P/N	DESCRIPTION
C51	110163	05397	T368B475M035AS	CAP - TANTA - 4.7 MFD - 35V - 20%
C52	100017	56289	C023B101F103M	CAP - CERAM - .01 MFD - 100V - 20%
C53	100017	56289	C023B101F103M	CAP - CERAM - .01 MFD - 100V - 20%
C54	100017	56289	C023B101F103M	CAP - CERAM - .01 MFD - 100V - 20%
C55	100017	56289	C023B101F103M	CAP - CERAM - .01 MFD - 100V - 20%
C56	100062	72982	8121-100-W5R0-103K	CAP - CERAM - .01 MFD - 100V - 10%
C57	100024	72982	5815-000Y5U104Z	CAP - CERAM - .1 MFD - 25V
C58	100024	72982	5815-000Y5U104Z	CAP - CERAM - .1 MFD - 25V
C59	100024	72982	5815-000Y5U104Z	CAP - CERAM - .1 MFD - 25V
C60	100024	72982	5815-000Y5U104Z	CAP - CERAM - .1 MFD - 25V
C61	100024	72982	5815-000Y5U104Z	CAP - CERAM - .1 MFD - 25V
C62	100024	72982	5815-000Y5U104Z	CAP - CERAM - .1 MFD - 25V
C63	100024	72982	5815-000Y5U104Z	CAP - CERAM - .1 MFD - 25V
C64	100062	72982	8121-100-W5R0-103K	CAP - CERAM - .01 MFD - 100V - 10%
C65	100062	72982	8121-100-W5R0-103K	CAP - CERAM - .01 MFD - 100V - 10%
C66	100062	72982	8121-100-W5R0-103K	CAP - CERAM - .01 MFD - 100V - 10%
C67	100062	72982	8121-100-W5R0-103K	CAP - CERAM - .01 MFD - 100V - 10%
C68	100062	72982	8121-100-W5R0-103K	CAP - CERAM - .01 MFD - 100V - 10%
C69	100062	72982	8121-100-W5R0-103K	CAP - CERAM - .01 MFD - 100V - 10%
C70	100062	72982	8121-100-W5R0-103K	CAP - CERAM - .01 MFD - 100V - 10%
C71	100062	72982	8121-100-W5R0-103K	CAP - CERAM - .01 MFD - 100V - 10%
C72	100062	72982	8121-100-W5R0-103K	CAP - CERAM - .01 MFD - 100V - 10%
CR1	210004	81349	1N4004	DIODE - SILICO

REF. DES.	RACAL-DANA P/N	FSC	MFG P/N	DESCRIPTION
CR2	210004	81349	1N4004	DIODE - SILICO
CR3	211083	81349	1N916B	DIODE - SILICO
CR4	211083	81349	1N916B	DIODE - SILICO
CR5	210004	81349	1N4004	DIODE - SILICO
E7	600977	79963	895	TAB DISCONNECT
E8	600977	79963	895	TAB DISCONNECT
E9	600977	79963	895	TAB DISCONNECT
E10	600977	79963	895	TAB DISCONNECT
E11	600977	79963	895	TAB DISCONNECT
E12	600786	00779	1-87022-0	POST, MACHINE APPLIED STRIP
E13	600786	00779	1-87022-0	POST, MACHINE APPLIED STRIP
E14	600786	00779	1-87022-0	POST, MACHINE APPLIED STRIP
E15	600786	00779	1-87022-0	POST, MACHINE APPLIED STRIP
E16	600786	00779	1-87022-0	POST, MACHINE APPLIED STRIP
E17	600786	00779	1-87022-0	POST, MACHINE APPLIED STRIP
E18	600977	79963	895	TAB DISCONNECT
E23	600786	00779	1-87022-0	POST, MACHINE APPLIED STRIP
E24	600786	00779	1-87022-0	POST, MACHINE APPLIED STRIP
F1	920961	71400	GLH8	FUSE, 8A, NORMAL BLO
J1	920735	71785	133-51-02-006	SOCKET, IC - 16P
J2	601050	00779	1-583486-5	CONN, 36 DUAL POS., PCB LEAF CONNECTOR
J3	601050	00779	1-583486-5	CONN, 36 DUAL POS., PCB LEAF CONNECTOR

REF. DES.	RACAL-DANA P/N	FSC	MFG P/N	DESCRIPTION
J4	601050	00779	1-583486-5	CONN, 36 DUAL POS., PCB LEAF CONNECTOR
J5	601050	00779	1-583486-5	CONN, 36 DUAL POS., PCB LEAF CONNECTOR
J6	601050	00779	1-583486-5	CONN, 36 DUAL POS., PCB LEAF CONNECTOR
J7	601050	00779	1-583486-5	CONN, 36 DUAL POS., PCB LEAF CONNECTOR
J9	600777	00779	3-583486-3	CONN - 18P
J10	600658	00779	2-583486-9	CONN - 22P
J100	601051	00779	102161-8	CONN, 34P, RT ANGLE, HEADER
J101	601051	00779	102161-8	CONN, 34P, RT ANGLE, HEADER
J102	601051	00779	102161-8	CONN, 34P, RT ANGLE, HEADER
J200	601060	06776	IDH-20LP-SR3	CONN, 20P, RT ANGLE, HEADER
L1	600245	--	L-2007-1LP	JUMPER, INSULATED
L2	600245	--	L-2007-1LP	JUMPER, INSULATED
L3	310154	12770	A-206068-2	INDUCTOR, 0.68 MH, TOROID CORE WRAPPED
L4	310153	21793	310153	INDUCTOR, 65UH, SW PWR SUPPLY
P11	601053	00779	583479-1	CONN CRIMP, SNAP-IN
Q1	200196	81349	2N3568	TRANS - NPN
Q2	200277	03508	2N4991	TRANS - SB5
Q3	200278	04713	2N6504	TRANS - PUR - SCR
Q4	200256	80131	2N3646	TRANS - FALLOUT
R1	000472	81349	RC07GF472J	RES - CARBON - 4.7K - 5% - 1/4W
R2	000102	81349	RC07GF102J	RES - CARBON - 1K - 5% - 1/4W
R3	000101	81349	RC07GF101J	RES - CARBON - 100 OHM - 5% - 1/4W

REF. DES.	RACAL-DANA P/N	FSC	MFG P/N	DESCRIPTION
R4	000202	81349	RC07GF202J	RES - CARBON - 2K - 5% - 1/4W
R5	030028	21793	030028	RES - WW - 15 OHM - 5% - 5W
R6	000561	81349	RC07GF561J	RES - CARBON - 560 OHM - 5% - 1/4W
R7	000100	81349	RC07GF100J	RES - CARBON - 10 OHM - 5% - 1/4 W
R8	030027	21793	030027	RES - WW - .05 OHM - 5% - 10W
R9	010966	81349	RN55C1301F	RES - METAL - 1.3K - 1% - 1/10W
R10	012087	81349	RN55C1212F	RES - METAL FILM - 12.1K - 1% - 1.10W
R11	012096	81349	RN55C1210F	RES - METAL FILM - 121 OHM - 1%
R12	012084	81349	RN55C	RES - METAL FILM - 100 OHM - 1% - 1/10W
R15	010630	81349	RN55C9091F	RES - METAL - 9.09K - 1% - 1/10W
R17	010980	81349	RN55C4641F	RES - METAL FILM - 4.64K - 1% - 1/10W
R18	000682	81349	RC07GF682J	RES - CARBON - 6.8K - 5% - 1/4W
R19	000472	81349	RC07GF472J	RES - CARBON - 4.7K - 5% - 1/4W
R20	012097	81349	RN55C4321F	RES - METAL FILM - 4.32K - 1%
R21	000100	81349	RC07GF100J	RES - CARBON - 10 OHM - 5% - 1/4W
R23	000105	81349	RC07GF105J	RES - CARBON - 1M - 5% - 1/4W
R24	000273	81349	RC07GF273J	RES - CARBON - 27K - 5% - 1/4W
R25	000273	81349	RC07GF273J	RES - CARBON - 27K - 5% - 1/4W
R26	000103	81349	RC07GF103J	RES - CARBON - 10K - 5% - 1/4W
R27	000201	81349	RC07GF201J	RES - CARBON - 200 OHM - 5% - 1/4W
R28	000202	81349	RC07GF202J	RES - CARBON - 2K - 5% - 1/4W
R29	000682	81349	RC07GF682J	RES - CARBON - 6.8K - 5% - 1/4W
R30	000393	81349	RC07GF393J	RES - CARBON - 39K - 5% - 1/4W

REF. DES.	RACAL-DANA P/N	FSC	MFG P/N	DESCRIPTION
R31	000334	81349	RC07GF334J	RES - CARBON - 330K - 5% - 1/4W
R32	001683	81349	RC20GF470J	RES - CARBON - 47 OHM - 5% - 1/2W
R33	000122	81349	RC07GF122J	RES - CARBON - 1.2K - 5% - 1/4W
R34	000101	81349	RC07GF101J	RES - CARBON - 100 OHM - 5% - 1/4W
R35	040196	11237	360T102B	POT - CERMET - 1K - 20%
R36	000202	81349	RC07GF202J	RES - CARBON - 2K - 5% - 1/4W
R37	001758	81349	RC32GF331J	RES - CARBON - 330 OHM - 5% - 1W
R41	000271	81349	RC07GF271J	RES - CARBON - 270 OHM - 5% - 1/4W
R42	000241	81349	RC07GF241J	RES - CARBON - 240 OHM - 5% - 1.4W
R43	000271	81349	RC07GF271J	RES - CARBON - 270 OHM - 5% - 1/4W
R44	000241	81349	RC07GF241J	RES - CARBON - 240 OHM - 5% - 1/4W
R45	000301	81349	RC07GF301J	RES - CARBON - 300 OHM - 5% - 1/4W
R46	000241	81349	RC07GF241J	RES - CARBON - 240 OHM - 5% - 1/4W
R47	000241	81349	RC07GF241J	RES - CARBON - 240 OHM - 5% - 1/4W
R48	000101	81349	RC07GF101J	RES - CARBON - 100 OHM - 5% - 1/4W
R49	000472	81349	RC07GF472J	RES - CARBON - 4.7K - 5% - 1/4W
TP1	600786	00779	1-87022-0	POST, MACHINE APPLIED STRIP
TP2	600786	00779	1-87022-0	POST, MACHINE APPLIED STRIP
TP3	600786	00779	1-87022-0	POST, MACHINE APPLIED STRIP
TP4	600786	00779	1-87022-0	POST, MACHINE APPLIED STRIP
TP5	600786	00779	1-87022-0	POST, MACHINE APPLIED STRIP
TP6	600786	00779	1-87022-0	POST, MACHINE APPLIED STRIP
TP7	600786	00779	1-87022-0	POST, MACHINE APPLIED STRIP

REF. DES.	RACAL-DANA P/N	FSC	MFG P/N	DESCRIPTION
TP8	600786	00779	1-87022-0	POST, MACHINE APPLIED STRIP
TP9	600786	00779	1-87022-0	POST, MACHINE APPLIED STRIP
TP10	600786	00779	1-87022-0	POST, MACHINE APPLIED STRIP
TP11	600786	00779	1-87022-0	POST, MACHINE APPLIED STRIP
TP12	600786	00779	1-87022-0	POST, MACHINE APPLIED STRIP
TP13	600786	00779	1-87022-0	POST, MACHINE APPLIED STRIP
TP14	600786	00779	1-87022-0	POST, MACHINE APPLIED STRIP
TP15	600786	00779	1-87022-0	POST, MACHINE APPLIED STRIP
TP16	600786	00779	1-87022-0	POST, MACHINE APPLIED STRIP
TP17	600786	00779	1-87022-0	POST, MACHINE APPLIED STRIP
TP18	600786	00779	1-87022-0	POST, MACHINE APPLIED STRIP
TP19	600786	00779	1-87022-0	POST, MACHINE APPLIED STRIP
TP20	600786	00779	1-87022-0	POST, MACHINE APPLIED STRIP
TP21	600786	00779	1-87022-0	POST, MACHINE APPLIED STRIP
TP22	600786	00779	1-87022-0	POST, MACHINE APPLIED STRIP
TP23	600786	00779	1-87022-0	POST, MACHINE APPLIED STRIP
TP24	600786	00779	1-87022-0	POST, MACHINE APPLIED STRIP
TP25	600786	00779	1-87022-0	POST, MACHINE APPLIED STRIP
TP26	600786	00779	1-87022-0	POST, MACHINE APPLIED STRIP
TP27	600786	00779	1-87022-0	POST, MACHINE APPLIED STRIP
TP28	600786	00779	1-87022-0	POST, MACHINE APPLIED STRIP
TP29	600786	00779	1-87022-0	POST, MACHINE APPLIED STRIP
TP30	600786	00779	1-87022-0	POST, MACHINE APPLIED STRIP

REF. DES.	RACAL-DANA P/N	FSC	MFG P/N	DESCRIPTION
TP31	600786	00779	1-87022-0	POST, MACHINE APPLIED STRIP
U1	230421	27014	DM81LS97N	IC
U2	230584	27014	74S64	IC - 4-WIDE AND NOR
U3	230630	07263	74F86PC	IC - EXCLUSIVE OR
U4	230583	27014	74S51	IC - DUAL - 2-WIDE AND NOR
U5	230421	27014	DM81LS97N	IC
U6	230386	27014	74LS273	IC
U7	230584	27014	74S64	IC - 4-WIDE AND NOR
U8	230234	01295	SN74LS04N	IC - 14 DIP, HEX INVERTER
U10	230368	27014	74LS138	IC
U11	230368	27014	74LS138	IC
U12	230368	27014	74LS138	IC
U13	230421	27014	DM81LS97N	IC
U14	230421	27014	DM81LS97N	IC
U15	230386	27014	74LS273	IC
U16	230368	27014	74LS138	IC
U17	230073	01295	7405	IC - CERAM, HEX INVERTER
U18	230234	01295	SN74LS04N	IC - 14 DIP, HEX INVERTER
U19	230346	01295	74LS157	IC
U20	230576	04713	MC6845	IC - CRT CONTROLLER
U21	230630	07263	74F86PC	IC - EXCLUSIVE OR
U22	230194	01295	SN74LS74N	IC - 14 DIP, DUAL D, FLIP-FLOP
U23	230346	01295	74LS157	IC

REF. DES.	RACAL-DANA P/N	FSC	MFG P/N	DESCRIPTION
U24	230305	01295	SN74LS08	IC - QUAD, 2 INPUT AND GATES
U25	230194	01295	SN74LS74N	IC - 14 DIP, DUAL D, FLIP-FLOP
U26	230346	01295	74LS157	IC
U27	230422	34335	AM8304B	IC - OCTAL
U28	230301	04713	MC7905CP	IC - 3 TERM VOLTAGE REGULATOR, -5V @ 1 AMP
U29	230203	04713	MC7812CK	IC
U30	230615	34649	2716	IC - PROM - 2K X 8
U31	230537	21793	230537	IC - MEMORY - 2114 ROM
U32	230537	21793	230537	IC - MEMORY - 2114 ROM
U33	230306	01295	SN74LS02	IC - QUAD, 2 INPUT NOR GATES
U34	230568	12969	PIC645	IC - SWITCHING REGULATOR
U35	230547	27014	LM339N	IC - QUAD COMPARATOR
U36	230193	01295	SN74LS00N	IC - 14 DIP, NAND GATE
U37	230210	01295	SN74165N	IC
U38	230382	27014	74LS161AN	IC
U39	230211	01295	SN74161N	IC
U40	230211	01295	SN74161N	IC
U43	230569	21793	230569	IC - SWITCHING REG & PULSE MOD
U44	230580	27014	74S11	IC - TRIPLE 3-INPUT NAND
W2	601023	98291	026-4802	PLUG, JUMPER
W3	601023	98291	026-4802	PLUG, JUMPER

REF. DES.	RACAL-DANA P/N	FSC	MFG P/N	DESCRIPTION
W4	601023	98291	026-4802	PLUG, JUMPER
Z1	080004	11236	750-61-R4.7KOHM	RES - CERMET 4.7K - NETWORK - 6P,5R - 2%
Z2	080032	11236	750-100-R4.7KOHM	RES - CERMET - 4.7K - NETWORK - 10P,9R
Z3	080004	11236	750-61-R4.7KOHM	RES - CERMET - 4.7K - NETWORK - 6P,5R - 2%
Z4	080051	91637	MSP10C05-221/331G	RES - ARRAY - 10P, 16R - 220/330
Z5	080051	91637	MSP10C05-221/331G	RES - ARRAY - 10P, 16R - 220/330
Z6	080032	11236	750-100-R4.7KOHM	RES - CERMET - 4.7K - NETWORK - 10P, 9R
90	500022	21793	500022	BUSS WIRE - COPPER TRIMMED - 22 GA
91	411668	21793	411668	PC BOARD, MOTHERBOARD (UNSTUFFED)
93	454601	21793	454601	HEATSINK, IC CASE MOUNT
94	500025	--	--	WIRE, TELFON COATED, STRANDED, 20 GA, BLK
95	500132	--	--	WIRE, TEFLON COATED, STRANDED, TWISTED PR, 24 GA, BLK
96	500219	--	--	WIRE, COPPER W/VARNISH INSULATION, 18 GA
97	524000	--	--	WIRE, TEFLON COATED, STRANDED, 20 GA, BLK
98	524111	--	--	WIRE, TELFON COATED, STRANDED, 24 GA, BRN
99	524333	--	--	WIRE, TEFLON COATED, STRANDED, 24 GA, ORN
100	500052	--	--	WIRE, TEFLON COATED, STRANDED, 18 GA, BLK

REF. DES.	RACAL-DANA P/N	FSC	MFG P/N	DESCRIPTION
101	524444	--	--	WIRE, TEFLON COATED, STRANDED, 24 GA, YEL
102	524666	-	-	WIRE, TEFLON COATED, STRANDED, 24 GA, BLU
105	501376	--	--	TUBING, TEFLON, 20 GA
108	600823	52072	40S-TSD-BD	SOCKET, DIP TYPE - 40P
110	500130	--	--	TUBING, TEFLON, THINWALL, CLEAR, 16GA
111	601022	00779	2-350800-2	TERMINAL, RECEPT - (2 REQ'D)
112	601013	--	3223-07FR-05	HEATSINK INSULATOR, 7 MIL PLASTIC
118	601057	00779	583259-3	CONTACT, CRIMP, SNAP-IN - (5 REQ'D)
121	601074	23880	1250V	GUIDE, P.C. BOARD - (15 REQ'D)
122	610533	46384	KF2-632	NUT, PRESS, SPLINE, 6-32 - (8 REQ'D)
123	610616	--	1247-11	SPACER, SWG, 6-32CL, .250 DIA - (5 REQ'D)
124	610752	--	--	SCREW, PPH, SELF TAP, 5-20, .375LG - (6 REQ'D)
126	610777	--	T18R	CABLE TIE
127	610851	18565	60-11-5791-1674	WASHER - (INSUL - TIP 32 STYLE - BLUE (2 REQ'D)
128	610924	06540	9534B-B-140	SPACER, SWG, 1/4"OD, .140ID, .031L - (7 REQ'D)
129	610947	86928	5607-73	WASHER, NYLON, #6 - (10 REQ'D)
131	610948	00779	530286-2	KEY, TWIN LEAF TYPE, POLARIZING - (14 REQ'D)
132	615042	--	--	MACHINE SCREW, PHILLIPS PANHEAD, 4-40 X .250 - (15 REQ'D)

REF. DES.	RACAL-DANA P/N	FSC	MFG P/N	DESCRIPTION
133	615057	--	--	MACHINE SCREW, PHILLIPS PANHEAD, 6-32 X .250 - (3 REQ'D)
134	615060	--	--	MACHINE SCREW, PHILLIPS PANHEAD, 6-32 X .438 - (5 REQ'D)
136	617102	--	--	WASHER, FLAT (LIGHT SERIES), #4 - (15 REQ'D)
137	617103	-	-	WASHER, FLAT (LIGHT SERIES), #6 - (3 REQ'D)
138	617127	--	--	WASHER, LOCK (LIGHT SERIES), #4 - (15 REQ'D)
139	617128	-	-	WASHER, LOCK (LIGHT SERIES), #6 - (7 REQ'D)
141	920469	21793	920469	COMP, THERMAL
142	920624	71785	133-59-02-063	SOCKET, IC - 24P - (2 REQ'D)
144	920971	75915	12208	FUSEHOLDER, P.C. MOUNT - (2 REQ'D)
148	920962	05972	242	LOCTITE, 242, MED STR
149	920808	--	274	ADHESIVE
150	920841	52072	CA-18S-TSO-BC	SOCKET, SOLDER TAIL, 18 PIN

REF. DES.	RACAL-DANA P/N	FSC	MFG. P/N	DESCRIPTION
C1	100024	72982	5815-000Y5U104Z	CAP - CERAM - .1 MFD - 25V
C2	100024	72982	5815-000Y5U104Z	CAP - CERAM - .1 MFD - 25V
C3	110126	05397	T368B685M035AS	CAP - TANTA - 6.8 MFD - 35V - 20%
C4	100024	72982	5815-000Y5U104Z	CAP - CERAM - .1 MFD - 25V
C5	100008	71471	ETCD-DI-1(N5600)	CAP - CERAM - 82 PFD - 500V - 10%
C6	100101	56289	C030B102F330J	CAP - CERAM - 33 PFD - 1000V - 5%
C7	100101	56289	C030B102F330J	CAP - CERAM - 33 PFD - 1000V - 5%
C8	110126	05397	T368B685M035AS	CAP - TANTA - 6.8 MFD - 35V - 20%
C9	110126	05397	T368B685M035AS	CAP - TANTA - 6.8 MFD - 35V - 20%
C10	100024	72982	5815-000Y5U104Z	CAP - CERAM - .1 MFD - 25V
C11	100024	72982	5815-000Y5U104Z	CAP - CERAM - .1 MFD - 25V
C12	100024	72982	5815-000Y5U104Z	CAP - CERAM - .1 MFD - 25V
C13	100024	72982	5815-000Y5U104Z	CAP - CERAM - .1 MFD - 25V
C14	100024	72982	5815-000Y5U104Z	CAP - CERAM - .1 MFD - 25V
C15	100024	72982	5815-000Y5U104Z	CAP - CERAM - .1 MFD - 25V
C16	110126	05397	T368B685M035AS	CAP - TANTA - 6.8 MFD - 35V - 20%
C17	110126	05397	T368B685M035AS	CAP - TANTA - 6.8 MFD - 35V - 20%
C18	100024	72982	5815-000Y5U104Z	CAP - CERAM - .1 MFD - 25V
C19	100024	72982	5815-000Y5U104Z	CAP - CERAM - .1 MFD - 25V
C20	100024	72982	5815-000Y5U104Z	CAP - CERAM - .1 MFD - 25V
C21	100024	72982	5815-000Y5U104Z	CAP - CERAM - .1 MFD - 25V
C22	100024	72982	5815-000Y5U104Z	CAP - CERAM - .1 MFD - 25V
C23	110126	05397	T368B685M035AS	CAP - TANTA - 6.8 MFD - 35V - 20%

REF. DES.	RACAL-DANA P/N	FSC	MFG P/N	DESCRIPTION
C24	100024	72982	5815-000Y5U104Z	CAP - CERAM - .1 MFD - 25V
R1	000561	81349	RC07GF561J	RES - CARBON - 560 OHM - 5% - 1/4W
R2	000561	81349	RC07GF561J	RES - CARBON - 560 OHM - 5% - 1/4W
R3	010643	81349	RN55C7152F	RES - METAL - 71.5K - 1% - 1/10W
R4	010697	81349	RN55C2672F	RES - METAL - 26.7K - 1% - 1/10W
R5	000104	81349	RC07GF104J	RES - CARBON - 100K - 5% - 1/4W
R6	000104	81349	RC07GF104J	RES - CARBON - 100K - 5% - 1/4W
R7	000105	81349	RC07GF105J	RES - CARBON - 1M - 5% - 1/4W
R8	000221	81349	RC07GF221J	RES - CARBON - 220 OHM - 5% - 1/4W
TP1	600786	00779	1-87022-0	POST, MACHINE APPLIED STRIP
TP2	600786	00779	1-87022-0	POST, MACHINE APPLIED STRIP
TP3	600786	00779	1-87022-0	POST, MACHINE APPLIED STRIP
TP4	600786	00779	1-87022-0	POST, MACHINE APPLIED STRIP
TP5	600786	00779	1-87022-0	POST, MACHINE APPLIED STRIP
TP6	600786	00779	1-87022-0	POST, MACHINE APPLIED STRIP
TP7	600786	00779	1-87022-0	POST, MACHINE APPLIED STRIP
TP8	600786	00779	1-87022-0	POST, MACHINE APPLIED STRIP
TP9	600786	00779	1-87022-0	POST, MACHINE APPLIED STRIP
U1	230234	01295	SN74LS04N	IC - 14 DIP, HEX INVERTER
U2	230540	01295	SN74S86N	IC - DIGITAL
U3	230194	01295	SN74LS74N	IC - 14 DIP, DUAL D, FLIP-FLOP

REF. DES.	RACAL-DANA P/N	FSC	MFG P/N	DESCRIPTION
U4	230194	01295	SN74LS74N	IC - 14 DIP, DUAL D, FLIP-FLOP
U5	230428	27014	DM74LS32N	IC
U6	230428	27014	DM74LS32N	IC
U7	230561	27014	74LS393	IC - LINEAR
U8	230670	21793	230670	IC - MEMORY - 256 X 8 - U8 PROM
U9	230561	27014	74LS393	IC
U10	230561	27014	74LS393	IC
U11	230667	32293	ICL8211CPA	IC - INT.
U12	230194	01295	SN74LS74N	IC - 14 DIP, DUAL D, FLIP-FLOP
U13	230234	01295	SN74LS04N	IC - 14 DIP, HEX INVERTER
U14	230248	01295	SN74LS10N	IC - POSITIVE NAND GATE
U15	230305	01295	SN74LS08	IC - QUAD, 2 INPUT AND GATES
U16	230493	27014	DM74367N	IC - DIG. TRI-STATE BUFFER
U17	230570	04713	MC6809	IC - CPU
U18	230667	32293	ICL8211CPA	IC - INT.
U19	230428	27014	DM74LS32N	IC
U20	230428	27014	DM74LS32N	IC
U21	230194	01295	SN74LS74N	IC - 14 DIP, DUAL D, FLIP-FLOP
U22	230368	27014	74LS138	IC
U23	230368	27014	74LS138	IC
U24	230368	27014	74LS138	IC
U25	230561	27014	74LS393	IC
U26	230440	27014	DM81LS95N	IC - 3 STATE OCTAL BUFFER

REF. DES.	RACAL-DANA P/N	FSC	MFG P/N	DESCRIPTION
U27	230422	34355	AM8304B	IC - OCTAL
U30	230671	21793	230671	IC - MEMORY - 8K X 8 - U30 - ROM
U31	230672	21793	230672	IC - MEMORY - 8K X 8 - U31 - ROM
U32	230673	21793	230673	IC - MEMORY - 8K X 8 - U32 - ROM
U33	230674	21793	230674	IC - MEMORY - 8K X 8 - U33 - ROM
U34	230675	21793	230675	IC - MEMORY - 8K X 8 - U34 - ROM
U35	230676	21793	230676	IC - MEMORY - 8K X 8 - U35 - ROM
U42	230648	--	TMM2016P	IC - MEMORY - 2K X 8 - RAM
U43	230648	--	TMM2016P	IC - MEMORY - 2K X 8 - RAM
U44	230648	--	TMM2016P	IC - MEMORY - 2K X 8 - RAM
W1	600245	--	L-2007-1LP	JUMPER, INSULATED
W2	600245	--	L-2007-1LP	JUMPER, INSULATED
Y1	920855	13571	--	CRYSTAL - 10 MHZ
Z1	080004	11236	750-61-R4.7KOHM	RES - CERMET- 4.7K - NETWORK - 6P, 5R - 2%
Z2	080036	11236	750-61-R220 OHM	RES - CERMET - 220 OHM - NETWORK .9W - 6P, 5R - 2%
Z3	080004	11236	750-61-R4.7KOHM	RES - CERMET - 4.7K - NETWORK - 6P, 5R - 2%
Z4	080032	11236	750-100-R4.7KOHM	RES - CERMET - 4.7K - NETWORK - 10P, 9R
Z5	080023	11236	750-81-R4.7KOHM	RES - CERMET - 4.7K - NETWORK - 8P, 7R

REF. DES.	RACAL-DANA P/N	FSC	MFG P/N	DESCRIPTION
Z7	080032	11236	750-100-R47.KOHM	RES - CERMET - 4.7K - NETWORK - 10P, 9R
56	411707	21793	411707	PCB, COMPUTER (UNSTUFFED)
62	600823	52072	CA40S-TSO-BC	SOCKET, DUAL IN-LINE, 40P
63	600947	52072	CA20S-TSO-BC	SOCKET, IC, 20P - (3 REQ'D)
66	920624	71785	133-59-02-063	SOCKET, IC, 24P - (11 REQ'D)
68	920891	52072	CA-28S-TSD	SOCKET, 28P, SOLDER TAIL - (6 REQ'D)

REF. DES.	RACAL-DANA P/N	FSC	MFG P/N	DESCRIPTION
C1	110143	05397	T368A105M035AS	CAP - TANTA - 1 MFD - 35V - 20%
C2	110126	05397	T368B685M035AS	CAP - TANTA - 6.8 MFD - 35V - 20%
C3	101145	04222	TCD-D1-IN5600-100	CAP - CERAM - 100 PFD - 500V - 100%
C4	100024	72982	5815-000Y5U104Z	CAP - CERAM - .1 MFD - 25V
C5	100024	72982	5815-000Y5U104Z	CAP - CERAM - .1 MFD - 25V
C6	100024	72982	5815-000Y5U104Z	CAP - CERAM - .1 MFD - 25V
C7	100024	72982	5815-000Y5U104Z	CAP - CERAM - .1 MFD - 25V
C8	100024	72982	5815-000Y5U104Z	CAP - CERAM - .1 MFD - 25V
C9	100024	72982	5815-000Y5U104Z	CAP - CERAM - .1 MFD - 25V
C10	100024	72982	5815-000Y5U104Z	CAP - CERAM - .1 MFD - 25V
C11	100016	71590	DD270	CAP - CERAM - 27 PFD - 1000V - 10%
C12	100016	71590	DD270	CAP - CERAM - 27 PFD - 1000V - 10%
C13	100024	72982	5815-000Y5U104Z	CAP - CERAM - .1 MFD - 25V
C14	100024	72982	5815-000Y5U104Z	CAP - CERAM - .1 MFD - 25V
C15	100024	72982	5815-000Y5U104Z	CAP - CERAM - .1 MFD - 25V
C16	100024	72982	5815-000Y5U104Z	CAP - CERAM - .1 MFD - 25V
C17	100024	72982	5815-000Y5U104Z	CAP - CERAM - .1 MFD - 25V
C18	100024	72982	5815-000Y5U104Z	CAP - CERAM - .1 MFD - 25V
C19	100024	72982	5815-000Y5U104Z	CAP - CERAM - .1 MFD - 25V
C20	100024	72982	5815-000Y5U104Z	CAP - CERAM - .1 MFD - 25V
C21	100024	72982	5815-000Y5U104Z	CAP - CERAM - .1 MFD - 25V
C22	100024	72982	5815-000Y5U104Z	CAP - CERAM - .1 MFD - 25V
C23	100024	72982	5815-000Y5U104Z	CAP - CERAM - .1 MFD - 25V

REF. DES.	RACAL-DANA P/N	FSC	MFG P/N	DESCRIPTION
C24	110126	05397	T368B685M035AS	CAP - TANTA - 6.8 MFD - 35V - 20%
R1	000513	81349	RC07GF513J	RES - CARBON - 51K - 5% - 1/4W
R2	000103	81349	RC07GF103J	RES - CARBON - 10K - 5% - 1/4W
R3	000472	81349	RC07GF472J	RES - CARBON - 4.7K - 5% - 1/4W
R4	000472	81349	RC07GF472J	RES - CARBON - 4.7K - 5% - 1/4W
R5	000103	81349	RC07GF103J	RES - CARBON - 10K - 5% - 1/4W
R6	000221	81349	RC07GF221J	RES - CARBON - 220 OHM - 5% - 1/4W
R7	000221	81349	RC07GF221J	RES - CARBON - 220 OHM - 5% - 1/4W
R8	000102	81349	RC07GF102J	RES - CARBON - 1K - 5% - 1/4W
R9	000102	81349	RC07GF102J	RES - CARBON - 1K - 5% - 1/4W
R10	000221	81349	RC07GF221J	RES - CARBON - 220 OHM - 5% - 1/4W
TP1	600786	00779	1-87022-0	POST, MACHINE APPLIED STRIP
TP2	600786	00779	1-87022-0	POST, MACHINE APPLIED STRIP
TP3	600786	00779	1-87022-0	POST, MACHINE APPLIED STRIP
TP4	600786	00779	1-87022-0	POST, MACHINE APPLIED STRIP
TP5	600786	00779	1-87022-0	POST, MACHINE APPLIED STRIP
U1	230234	01295	SN74LS04N	IC - 14 DIP, HEX INVERTER
U2	230540	01295	SN74S86N	IC - DIGITAL
U3	230194	01295	SN74LS74N	IC - 14 DIP, DUAL D, FLIP-FLOP
U4	230194	01295	SN74LS74N	IC - 14 DIP, DUAL D, FLIP-FLOP
U5	230237	01295	SN74LS123N	IC - DUAL ONE SHOT, PLASTIC
U6	230248	01295	SN74LS10N	IC - POSITIVE NAND GATE

REF. DES.	RACAL-DANA P/N	FSC	MFG P/N	DESCRIPTION
U7	230234	01295	SN74LS04N	IC - 14 DIP, HEX INVERTER
U8	230196	01295	SN74LS51N	IC - 14 DIP, AND-OR-INV GATES
U9	230493	27014	DM74367N	IC - DIG TRI-STATE BUFFER
U10	230422	34355	AM8304B	IC - OCTAL
U11	230422	34355	AM8304B	IC - OCTAL
U12	230493	27014	DM74367N	IC - DIG TRI-STATE BUFFER
U13	230493	27014	DM74367N	IC - DIG TRI-STATE BUFFER
U14	230493	27014	DM74367N	IC - DIG TRI-STATE BUFFER
U15	230570	04713	MC6809	IC - CPU
U16	230537	21793	230537	IC - MEMORY - 2114 - ROM
U17	230537	21793	230537	IC - MEMORY - 2114 - ROM
U18	230537	21793	230537	IC - MEMORY - 2114 - ROM
U19	230537	21793	230537	IC - MEMORY - 2114 - ROM
U20	230537	21793	230537	IC - MEMORY - 2114 - ROM
U21	230537	21793	230537	IC - MEMORY - 2114 - ROM
U22	230537	21793	230537	IC - MEMORY - 2114 - ROM
U23	230537	21793	230537	IC - MEMORY - 2114 - ROM
U24	230537	21793	230537	IC - MEMORY - 2114 - ROM
U25	230537	21793	230537	IC - MEMORY - 2114 - ROM
U26	230368	27014	74LS138	IC
U27	230368	27014	74LS138	IC
U28	230368	27014	74LS138	IC
U29	230305	01295	SN74LS08	IC - QUAD, 2 INPUT AND GATES

REF. DES.	RACAL-DANA P/N	FSC	MFG P/N	DESCRIPTION
U30	230428	27014	DM74LS32N	IC
U31	230644	--	SYP2332	IC - MEMORY - 4K X 8 ROM
U32	230596	--	SYP2364	IC - 8K X 8 ROM, U32
U34	230597	--	SYP2364	IC - 8K X 8 ROM, U34
U35	230598	--	SYP2364	IC - 8K X 8 ROM, U35
Y1	920855	13571	--	CRYSTAL - 10MHZ
Z1	080032	11236	750-100-R4.7KOHM	RES - CERMET - 4.7K - NETWORK - 10P,9R
Z2	080023	11236	750-81-R4.7KOHM	RES - CERMET - 4.7K - NETWORK - 8P,7R - 2%
Z3	080023	11236	750-81-R4.7KOHM	RES - CERMET - 4.7K - NETWORK - 8P,7R - 2%
Z4	080032	11236	750-100-R4.7KOHM	RES - CERMET - 4.7K - NETWORK - 10P,9R - 2%
37	411661	21793	411661	PC BOARD, CPU (UNSTUFFED)
42	600823	52072	CA40S-TSO-BC	SOCKET, DUAL IN-LINE, 40P
43	600947	52072	CA20S-TSO-BC	SOCKET, IC, 20P - (2 REQ'D)
44	920624	71785	133-59-02-063	SOCKET, IC - 24P - (11 REQ'D)
46	920841	52072	CA-18S-TSO-BC	SOCKET, SOLDER TAIL 18P - (10 REQ'D)

REF. DES.	RACAL-DANA P/N	FSC	MFG P/N	DESCRIPTION
C1	100024	72982	5815-000Y5U104Z	CAP - CERAM - .1 MFD - 25V
C2	100024	72982	5815-000Y5U104Z	CAP - CERAM - .1 MFD - 25V
C3	100024	72982	5815-000Y5U104Z	CAP - CERAM - .1 MFD - 25V
C4	110126	05397	T368B685M035AS	CAP - TANTA - 6.8 MFD - 35V - 20%
C5	100024	72982	5815-000Y5U104Z	CAP - CERAM - .1 MFD - 25V
C6	100024	72982	5815-000Y5U104Z	CAP - CERAM - .1 MFD - 25V
C7	100024	72982	5815-000Y5U104Z	CAP - CERAM - .1 MFD - 25V
C8	100024	72982	5815-000Y5U104Z	CAP - CERAM - .1 MFD - 25V
C9	100024	72982	5815-000Y5U104Z	CAP - CERAM - .1 MFD - 25V
C10	100024	72982	5815-000Y5U104Z	CAP - CERAM - .1 MFD - 25V
C11	100024	72982	5815-000Y5U104Z	CAP - CERAM - .1 MFD - 25V
C12	100024	72982	5815-000Y5U104Z	CAP - CERAM - .1 MFD - 25V
C13	100024	72982	5815-000Y5U104Z	CAP - CERAM - .1 MFD - 25V
C14	100024	72982	5815-000Y5U104Z	CAP - CERAM - .1 MFD - 25V
C15	100024	72982	5815-000Y5U104Z	CAP - CERAM - .1 MFD - 25V
C16	100024	72982	5815-000Y5U104Z	CAP - CERAM - .1 MFD - 25V
R1	000331	81349	RC07GF331J	RES - CARBON - 330 OHM - 5% - 1/4W
R2	000472	81349	RC07GF472J	RES - CARBON - 4.7K - 5% - 1/4W
R3	000331	81349	RC07GF331J	RES - CARBON - 330 OHM - 5% - 1/4W
R4	000331	81349	RC07GF331J	RES - CARBON - 330 OHM - 5% - 1/4W
R5	000331	81349	RC07GF331J	RES - CARBON - 330 OHM - 5% - 1/4W
R6	000472	81349	RC07GF472J	RES - CARBON - 4.7K - 5% - 1/4W
R7	000472	81349	RC07GF472J	RES - CARBON - 4.7K - 5% - 1/4W

REF. DES.	RACAL-DANA P/N	FSC	MFG P/N	DESCRIPTION
R8	000472	81349	RC07GF472J	RES - CARBON - 4.7K - 5% - 1/4W
R9	000472	81349	RC07GF472J	RES - CARBON - 4.7K - 5% - 1/4W
R10	000472	81349	RC07GF472J	RES - CARBON - 4.7K - 5% - 1/4W
R11	000472	81349	RC07GF472J	RES - CARBON - 4.7K - 5% - 1/4W
R12	000472	81349	RC07GF472J	RES - CARBON - 4.7K - 5% - 1/4W
R13	000472	81349	RC07GF472J	RES - CARBON - 4.7K - 5% - 1/4W
TP1	600786	00779	1-87022-0	POST, MACHINE APPLIED STRIP
TP2	600786	00779	1-87022-0	POST, MACHINE APPLIED STRIP
TP3	600786	00779	1-87022-0	POST, MACHINE APPLIED STRIP
TP4	600786	00779	1-87022-0	POST, MACHINE APPLIED STRIP
TP5	600786	00779	1-87022-0	POST, MACHINE APPLIED STRIP
TP6	600786	00779	1-87022-0	POST, MACHINE APPLIED STRIP
TP7	600786	00779	1-87022-0	POST, MACHINE APPLIED STRIP
TP8	600786	00779	1-87022-0	POST, MACHINE APPLIED STRIP
TP9	600786	00779	1-87022-0	POST, MACHINE APPLIED STRIP
TP10	600786	00779	1-87022-0	POST, MACHINE APPLIED STRIP
TP11	600786	00779	1-87022-0	POST, MACHINE APPLIED STRIP
TP12	600786	00779	1-87022-0	POST, MACHINE APPLIED STRIP
TP13	600786	00779	1-87022-0	POST, MACHINE APPLIED STRIP
TP14	600786	00779	1-87022-0	POST, MACHINE APPLIED STRIP
TP15	600786	00779	1-87022-0	POST, MACHINE APPLIED STRIP
TP16	600786	00779	1-87022-0	POST, MACHINE APPLIED STRIP

REF. DES.	RACAL-DANA P/N	FSC	MFG P/N	DESCRIPTION
U1	230447	01295	74S112	IC
U2	230579	27014	74S10	IC - TRIPLE 3-INPUT AND
U3	230446	01295	74S08	IC
U4	230593	27014	74S74	IC - DUAL FLIP-FLOP
U5	230589	27014	74S00	IC - NAND GATE
U6	230073	01295	7405	IC - CERAM - HEX INVERTER
U7	230368	27014	74LS138	IC
U8	230584	27014	74S64	IC - 4-WIDE AND NOR
U9	230574	27014	8253	IC - 3 CH, PROG. TIMER
U10	230574	27014	8253	IC - 3 CH, PROG. TIMER
U11	230593	27014	74S74	IC - DUAL FLIP-FLOP
U12	230591	27014	74S04	IC - HEX INVERTING BUFFER
U13	230582	27014	74S32	IC - QUAD - 2-INPUT OR
U14	230591	27014	74S04	IC - HEX INVERTING BUFFER
U15	230368	27014	74LS138	IC
U16	230584	27014	74S64	IC - 4-WIDE AND NOR
U17	230386	27014	74LS273	IC
U18	230382	27014	74LS161AN	IC
U19	230593	27014	74S74	IC - DUAL FLIP-FLOP
U20	230582	27014	74S32	IC - QUAD - 2-INPUT OR
U21	230446	01295	74S08	IC
U22	230582	27014	74S32	IC - QUAL - 2-INPUT OR
U23	230589	27014	74S00	IC - NAND GATE

REF. DES.	RACAL-DANA P/N	FSC	MFG P/N	DESCRIPTION
U24	230330	01295	74LS367	IC
U25	230359	27014	DM74LS151N	IC
U26	230386	27014	74LS273	IC
U27	230616	34335	SN74S161N	IC - 4-BIT BINARY COUNTER
U28	230592	27014	74S30	IC - 8-INPUT NAND GATE
U29	230591	27014	74S04	IC - HEX INVERTING BUFFER
U30	230593	27014	74S74	IC - DUAL FLIP-FLOP
U31	230446	01295	74S08	IC
U32	230593	27014	74S74	IC - DUAL FLIP-FLOP
U33	230382	27014	74LS161AN	IC
U34	230584	27014	74S64	IC - 4-WIDE AND NOR
U35	230386	27014	74LS273	IC
U36	230616	34335	SN74S161N	IC - 4-BIT BINARY COUNTER
U37	230591	27014	74S04	IC - HEX INVERTING BUFFER
U38	230593	27014	74S74	IC - DUAL FLIP-FLOP
U39	230446	01295	74S08	IC
U40	230590	27014	74S02	IC - 2-INPUT POS NOR GATE
U41	230579	27014	74S10	IC - TRIPLE 3-INPUT AND
U42	230382	27014	74LS161AN	IC
U43	230591	27014	74S04	IC - HEX INVERTING BUFFER
U44	230386	27014	74LS273	IC
U45	230616	34335	SN74S161N	IC - 4-BIT BINARY COUNTER
U46	230592	27014	74S30	IC - 8-INPUT NAND GATE

REF. DES.	RACAL-DANA P/N	FSC	MFG P/N	DESCRIPTION
U47	230382	27014	74LS161AN	IC
U48	230582	27014	74S32	IC - QUAD - 2-INPUT OR
U49	230580	27014	74S11	IC - TRIPLE - 3-INPUT NAND
U50	230582	27014	74S32	IC - QUAD - 2-INPUT OR
U51	230382	27014	74LS161AN	IC
U52	230317	01295	SN74LS90	IC
U53	230386	27014	74LS273	IC
U54	230616	34335	SN74S161N	IC - 4-BIT BINARY COUNTER
U55	230593	27014	74S74	IC - DUAL, FLIP-FLOP
34	411664	21793	411664	PC BOARD, CONTROL (UNSTUFFED)
38	920624	71785	133-59-02-063	SOCKET, IC - 24P - (2 REQ'D)

REF. DES.	RACAL-DANA P/N	FSC	MFG P/N	DESCRIPTION
C1	110126	05397	T368B685M035AS	CAP - TANTA - 6.8 MFD - 35V - 20%
C2	100024	72982	5815-000Y5U104Z	CAP - CERAM- .1 MFD - 25V
C3	100024	72982	5815-000Y5U104Z	CAP - CERAM- .1 MFD - 25V
C4	100024	72982	5815-000Y5U104Z	CAP - CERAM- .1 MFD - 25V
C5	100024	72982	5815-000Y5U104Z	CAP - CERAM- .1 MFD - 25V
C6	100024	72982	5815-000Y5U104Z	CAP - CERAM- .1 MFD - 25V
C7	100024	72982	5815-000Y5U104Z	CAP - CERAM- .1 MFD - 25V
C8	100024	72982	5815-000Y5U104Z	CAP - CERAM- .1 MFD - 25V
C9	100024	72982	5815-000Y5U104Z	CAP - CERAM- .1 MFD - 25V
C10	100024	72982	5815-000Y5U104Z	CAP - CERAM- .1 MFD - 25V
C11	100024	72982	5815-000Y5U104Z	CAP - CERAM- .1 MFD - 25V
C12	100088	72982	8121-M100-C0G221J	CAP - CERAM - 220 PFD - 100V - 5%
C13	100088	72982	8121-M100-C0G221J	CAP - CERAM - 220 PFD - 100V - 5%
C14	100024	72982	5815-000Y5U104Z	CAP - CERAM - .1 MFD - 25V
C15	100024	72982	5815-000Y5U104Z	CAP - CERAM - .1 MFD - 25V
C16	100024	72982	5815-000Y5U104Z	CAP - CERAM - .1 MFD - 25V
C17	100024	72982	5815-000Y5U104Z	CAP - CERAM - .1 MFD - 25V
CR1	211083	81349	1N916B	DIODE - SILICO
E8	600786	00779	1-87022-0	POST, MACHINE APPLIED STRIP
E9	600786	00779	1-87022-0	POST, MACHINE APPLIED STRIP
J12	920735	71785	133-51-02-006	SOCKET, IC - 16P
Q1	200037	80131	2N3646	TRANS - SILICO - NPN

REF. DES.	RACAL-DANA P/N	FSC	MFG P/N	DESCRIPTION
R1	000472	81349	RC07GF472J	RES - CARBON - 4.7K - 5% - 1/4W
R2	000472	81349	RC07GF472J	RES - CARBON - 4.7K - 5% - 1/4W
R3	000472	81349	RC07GF472J	RES - CARBON - 4.7K - 5% - 1/4W
R4	000681	81349	RC07GF681J	RES - CARBON - 680 OHM - 5% - 1/4W
R5	000472	81349	RC07GF472J	RES - CARBON - 4.7K - 5% - 1/4W
R6	000221	81349	RC07GF221J	RES - CARBON - 220 OHM - 5% - 1/4W
R7	000472	81349	RC07GF472J	RES - CARBON - 4.7K - 5% - 1/4W
R8	000472	81349	RC07GF472J	RES - CARBON - 4.7K - 5% - 1/4W
R9	000472	81349	RC07GF472J	RES - CARBON - 4.7K - 5% - 1/4W
R10	000472	81349	RC07GF472J	RES - CARBON - 4.7K - 5% - 1/4W
R11	000472	81349	RC07GF472J	RES - CARBON - 4.7K - 5% - 1/4W
R12	000472	81349	RC07GF472J	RES - CARBON - 4.7K - 5% - 1/4W
R13	000472	81349	RC07GF472J	RES - CARBON - 4.7K - 5% - 1/4W
R14	000471	81349	RC07GF471J	RES - CARBON - 470 OHM - 5% - 1/4W
R15	000101	81349	RC07GF101J	RES - CARBON - 100 OHM - 5% - 1/4W
R16	000221	81349	RC07GF221J	RES - CARBON - 220 OHM - 5% - 1/4W
R17	000331	81349	RC07GF331J	RES - CARBON - 330 OHM - 5% - 1/4W
R18	040012	02111	50-2-1-501	POT - 500 OHM
R19	040012	02111	50-2-1-501	POT - 500 OHM
R20	000472	81349	RC07GF472J	RES - CARBON - 4.7K - 5% - 1/4W
R21	000472	81349	RC07GF472J	RES - CARBON - 4.7K - 5% - 1/4W
R22	000472	81349	RC07GF472J	RES - CARBON - 4.7K - 5% - 1/4W
R23	000472	81349	RC07GF472J	RES - CARBON - 4.7K - 5% - 1/4W

REF. DES.	RACAL-DANA P/N	FSC	MFG P/N	DESCRIPTION
R24	000391	81349	RC07GF391J	RES - CARBON - 390 OHM - 5% - 1/4W
TP1	600786	00779	1-87022-0	POST, MACHINE APPLIED STRIP
TP2	600786	00779	1-87022-0	POST, MACHINE APPLIED STRIP
TP3	600786	00779	1-87022-0	POST, MACHINE APPLIED STRIP
TP4	600786	00779	1-87022-0	POST, MACHINE APPLIED STRIP
TP5	600786	00779	1-87022-0	POST, MACHINE APPLIED STRIP
TP6	600786	00779	1-87022-0	POST, MACHINE APPLIED STRIP
U1	230616	34335	SN74S161N	IC - 4-BIT BINARY COUNTER
U2	230616	34335	SN74S161N	IC - 4-BIT BINARY COUNTER
U3	230368	27014	74LS138	IC
U4	230579	27014	74S10	IC - TRIPLE 3-INPUT AND
U5	230639	--	74F74	IC - DIGITAL
U7	230616	34335	SN74S161N	IC - 4-BIT BINARY COUNTER
U8	230616	34335	SN74S161N	IC - 4-BIT BINARY COUNTER
U9	230386	27014	74LS273	IC
U10	230579	27014	74S10	IC - TRIPLE 3-INPUT AND
U11	230591	27014	74S04	IC - HEX INVERTING BUFFER
U13	230571	34649	2115AL	IC - BIPOLAR 1K X 1 RAM
U14	230571	34649	2115AL	IC - BIPOLAR 1K X 1 RAM
U15	230571	34649	2115AL	IC - BIPOLAR 1K X 1 RAM
U16	230571	34649	2115AL	IC - BIPOLAR 1K X 1 RAM
U17	230382	27014	74LS161AN	IC
U18	230386	27014	74LS273	IC

REF. DES.	RACAL-DANA P/N	FSC	MFG P/N	DESCRIPTION
U19	230446	01295	74S08	IC
U20	230592	27014	74S30	IC - 8-INPUT NAND GATE
U22	230572	34335	93L422	IC - BIPOLAR 256 X 4 RAM
U23	230572	34335	93L422	IC - BIPOLAR 256 X 4 RAM
U24	230382	27014	74LS161AN	IC
U25	230386	27014	74LS273	IC
U26	230234	01295	SN74LS04N	IC - 14 DIP, HEX INVERTER
U27	230583	27014	74S51	IC - DUAL 2-WIDE AND NOR
U28	230572	34355	93L422	IC - BIPOLAR 256 X 4 RAM
U29	230572	34355	93L422	IC - BIPOLAR 256 X 4 RAM
U30	230421	27014	DM81LS97N	IC
U31	230421	27014	DM81LS97N	IC
U32	230582	27014	74S32	IC - QUAD 2-INPUT OR
U33	230593	27014	74S74	IC - DUAL FLIP-FLOP
U34	230447	01295	74S112	IC
U35	230589	27014	74S00	IC - NAND GATE
U36	230578	27014	74S05	IC - HEX O.C. INVERTER
U37	230583	27014	74S51	IC - DUAL 2-WIDE AND NOR
U38	230540	01295	SN74S86N	IC - DIGITAL
W5	601023	98291	026-4802	PLUG - JUMPER
43	411660	21793	411660	PC BOARD, DATA COLLECT (UNSTUFFED)
44	500023	--	--	WIRE, BARE COPPER/TIN, ALPHA 299
48	601073	52072	CA-22SE-10SD	SOCKET, 22P DIP - (4 REQ'D)

REF. DES.	RACAL-DANA P/N	FSC	MFG P/N	DESCRIPTION
C1	110126	05397	T368B685M035AS	CAP - TANTA - 6.8 MFD - 35V - 20%
C2	100024	72982	5815-000Y5U104Z	CAP - CERAM - .1 MFD - 25V
C3	100024	72982	5815-000Y5U104Z	CAP - CERAM - .1 MFD - 25V
C4	100024	72982	5815-000Y5U104Z	CAP - CERAM - .1 MFD - 25V
C5	100024	72982	5815-000Y5U104Z	CAP - CERAM - .1 MFD - 25V
C6	100024	72982	5815-000Y5U104Z	CAP - CERAM - .1 MFD - 25V
C7	100024	72982	5815-000Y5U104Z	CAP - CERAM - .1 MFD - 25V
C8	100024	72982	5815-000Y5U104Z	CAP - CERAM - .1 MFD - 25V
C9	100024	72982	5815-000Y5U104Z	CAP - CERAM - .1 MFD - 25V
C10	100024	72982	5815-000Y5U104Z	CAP - CERAM - .1 MFD - 25V
C11	100024	72982	5815-000Y5U104Z	CAP - CERAM - .1 MFD - 25V
C12	100088	72982	8121-M100-C0G221J	CAP - CERAM - 220 PFD - 100V - 5%
C13	100088	72982	8121-M100-C0G221J	CAP - CERAM - 220 PFD - 100V - 5%
C14	100024	72982	5815-000Y5U104Z	CAP - CERAM - .1 MFD - 25V
C15	100024	72982	5815-000Y5U104Z	CAP - CERAM - .1 MFD - 25V
C16	100024	72982	5815-000Y5U104Z	CAP - CERAM - .1 MFD - 25V
C17	100024	72982	5815-000Y5U104Z	CAP - CERAM - .1 MFD - 25V
CR1	211083	81349	1N916B	DIODE - SILICO
E8	600786	00779	1-87022-0	POST, MACHINE APPLIED STRIP
E9	600786	00779	1-87022-0	POST, MACHINE APPLIED STRIP
J1	920735	71785	133-51-02-006	SOCKET, IC - 16P

REF. DES.	RACAL-DANA P/N	FSC	MFG P/N	DESCRIPTION
Q1	200037	80131	2N3646	TRANS - SILICO - NPN
R1	000472	81349	RC07GF472J	RES - CARBON - 4.7K - 5% - 1/4W
R2	000472	81349	RC07GF472J	RES - CARBON - 4.7K - 5% - 1/4W
R3	000472	81349	RC07GF472J	RES - CARBON - 4.7K - 5% - 1/4W
R4	000681	81349	RC07GF681J	RES - CARBON - 680 OHM - 5% - 1/4W
R5	000472	81349	RC07GF472J	RES - CARBON - 4.7K - 5% - 1/4W
R6	000221	81349	RC07GF221J	RES - CARBON - 220 OHM - 5% - 1/4W
R7	000472	81349	RC07GF472J	RES - CARBON - 4.7K - 5% - 1/4W
R8	000472	81349	RC07GF472J	RES - CARBON - 4.7K - 5% - 1/4W
R9	000472	81349	RC07GF472J	RES - CARBON - 4.7K - 5% - 1/4W
R10	000472	81349	RC07GF472J	RES - CARBON - 4.7K - 5% - 1/4W
R11	000472	81349	RC07GF472J	RES - CARBON - 4.7K - 5% - 1/4W
R12	000472	81349	RC07GF472J	RES - CARBON - 4.7K - 5% - 1/4W
R13	000472	81349	RC07GF472J	RES - CARBON - 4.7K - 5% - 1/4W
R14	000471	81349	RC07GF471J	RES - CARBON - 470 OHM - 5% - 1/4W
R15	000101	81349	RC07GF101J	RES - CARBON - 100 OHM - 5% - 1/4W
R16	000221	81349	RC07GF221J	RES - CARBON - 220 OHM - 5% - 1/4W
R17	000331	81349	RC07GF331J	RES - CARBON - 330 OHM - 5% - 1/4W
R18	040012	02111	50-2-1-501	POT - 500 OHM
R19	040012	02111	50-2-1-501	POT - 500 OHM
R20	000472	81349	RC07GF472J	RES - CARBON - 4.7K - 5% - 1/4W
R21	000472	81349	RC07GF472J	RES - CARBON - 4.7K - 5% - 1/4W

REF. DES.	RACAL-DANA P/N	FSC	MFG P/N	DESCRIPTION
R22	000472	81349	RC07GF472J	RES - CARBON - 4.7K - 5% - 1/4W
R23	000472	81349	RC07GF472J	RES - CARBON - 4.7K - 5% - 1/4W
R24	000391	81349	RC07GF391J	RES - CARBON - 390 OHM - 5% - 1/4W
TP1	600786	00779	1-87022-0	POST, MACHINE APPLIED STRIP
TP2	600786	00779	1-87022-0	POST, MACHINE APPLIED STRIP
TP3	600786	00779	1-87022-0	POST, MACHINE APPLIED STRIP
TP4	600786	00779	1-87022-0	POST, MACHINE APPLIED STRIP
TP5	600786	00779	1-87022-0	POST, MACHINE APPLIED STRIP
TP6	600786	00779	1-87022-0	POST, MACHINE APPLIED STRIP
U1	230616	34335	SN74S161N	IC - 4-BIT BINARY COUNTER
U2	230616	34335	SN74S161N	IC - 4-BIT BINARY COUNTER
U3	230386	27014	74LS138	IC
U4	230579	27014	74S10	IC - TRIPLE 3-INPUT AND
U5	230639	--	74F74	IC - DIGITAL
U7	230616	34335	SN74S161N	IC - 4-BIT BINARY COUNTER
U8	230616	34335	SN74S161N	IC - 4-BIT BINARY COUNTER
U9	230386	27014	74LS273	IC
U10	230579	27014	74S10	IC - TRIPLE 3-INPUT AND
U11	230591	27014	74S04	IC - HEX INVERTING BUFFER
U13	230621	34649	2115H-2	IC - 1K X 1 RAM
U14	230621	34649	2115H-2	IC - 1K X 1 RAM
U15	230571	34649	2115AL	IC - BIPOLAR - 1K X 1 RAM

REF. DES.	RACAL-DANA P/N	FSC	MFG P/N	DESCRIPTION
U16	230571	34649	2115AS	IC - BIPOLAR - 1K X 1 RAM
U17	230382	27014	74LS161AN	IC
U18	230386	27014	74LS273	IC
U19	230446	01295	74S08	IC
U20	230592	27014	74S30	IC - 8-INPUT NAND GATE
U22	230572	34335	93L422	IC - BIPOLAR - 256 X 4 RAM
U23	230572	34335	93L422	IC - BIPOLAR - 256 X 4 RAM
U24	230382	27014	74LS161AN	IC
U25	230386	27014	74LS273	IC
U26	230234	01295	SN74LS04N	IC - 14 DIP, HEX INVERTER
U27	230583	27014	74S51	IC - DUAL 2-WIDE AND NOR
U28	230572	34335	93L422	IC - BIPOLAR - 256 X 4 RAM
U29	230572	34335	92L422	IC - BIPOLAR - 256 X 4 RAM
U30	230421	27014	DM81LS97N	IC
U31	230421	27014	DM81LS97N	IC
U32	230582	27014	74S32	IC - QUAD - 2-INPUT OR
U33	230593	27014	74S74	IC - DUAL FLIP-FLOP
U34	230447	01295	74S112	IC
U35	230589	27014	74S00	IC - NAND GATE
U36	230578	27014	74S05	IC - HEX O.C. INVERTER
U37	230583	27014	74S51	IC - DUAL 2-WIDE AND NOR
U38	230540	01295	SN74S86N	IC - DIGITAL

401660 - PCB ASSEMBLY, CHANNEL X/Y INPUT (Continued) E

REF. DES.	RACAL-DANA P/N	FSC	MFG P/N	DESCRIPTION
W5	601023	98291	026-4802	PLUG - JUMPER
42	411660	21793	411660	PC BOARD, DATA COLLECT (UNSTUFFED)
44	500023	--	--	WIRE, BARE COPPER/TIN, ALPHA-299
48	601073	52072	CA-22SE-10SD	SOCKET, 22P DIP - (4 REQ'D)

REF. DES.	RACAL-DANA P/N	FSC	MFG P/N	DESCRIPTION
C1	110126	05397	T368B685M035AS	CAP - TANTA - 6.8 MFD - 35V - 20%
C2	100024	72982	5815-000Y5U104Z	CAP - CERAM - .1 MFD - 25V
C3	100024	72982	5815-000Y5U104Z	CAP - CERAM - .1 MFD - 25V
C4	100024	72982	5815-000Y5U104Z	CAP - CERAM - .1 MFD - 25V
C5	100024	72982	5815-000Y5U104Z	CAP - CERAM - .1 MFD - 25V
C6	100024	72982	5815-000Y5U104Z	CAP - CERAM - .1 MFD - 25V
C7	100024	72982	5815-000Y5U104Z	CAP - CERAM - .1 MFD - 25V
C8	100024	72982	5815-000Y5U104Z	CAP - CERAM - .1 MFD - 25V
C9	100024	72982	5815-000Y5U104Z	CAP - CERAM - .1 MFD - 25V
C10	100024	72982	5815-000Y5U104Z	CAP - CERAM - .1 MFD - 25V
C11	100024	72982	5815-000Y5U104Z	CAP - CERAM - .1 MFD - 25V
C15	100024	72982	5815-000Y5U104Z	CAP - CERAM - .1 MFD - 25V
C17	100024	72982	5815-000Y5U104Z	CAP - CERAM - .1 MFD - 25V
R1	000472	81349	RC07GF472J	RES - CARBON - 4.7K - 5% - 1/4W
R2	000472	81349	RC07GF472J	RES - CARBON - 4.7K - 5% - 1/4W
R3	000472	81349	RC07GF472J	RES - CARBON - 4.7K - 5% - 1/4W
R4	000681	81349	RC07GF681J	RES - CARBON - 680 OHM - 5% - 1/4W
R5	000472	81349	RC07GF472J	RES - CARBON - 4.7K - 5% - 1/4W
R6	000221	81349	RC07GF220J	RES - CARBON - 220 OHM - 5% - 1/4W
R7	000472	81349	RC07GF472J	RES - CARBON - 4.7K - 5% - 1/4W
R8	000472	81349	RC07GF472J	RES - CARBON - 4.7K - 5% - 1/4W
R9	000472	81349	RC07GF472J	RES - CARBON - 4.7K - 5% - 1/4W

REF. DES.	RACAL-DANA P/N	FSC	MFG P/N	DESCRIPTION
R10	000472	81349	RC07GF472J	RES - CARBON - 4.7K - 5% - 1/4W
R11	000472	81349	RC07GF472J	RES - CARBON - 4.7K - 5% - 1/4W
TP1	600786	00779	1-87022-0	POST, MACHINE APPLIED STRIP
TP2	600786	00779	1-87022-0	POST, MACHINE APPLIED STRIP
TP3	600786	00779	1-87022-0	POST, MACHINE APPLIED STRIP
TP4	600786	00779	1-87022-0	POST, MACHINE APPLIED STRIP
TP5	600786	00779	1-87022-0	POST, MACHINE APPLIED STRIP
U1	230616	34335	SN74LS161N	IC - 4-BIT BINARY COUNTER
U2	230616	34335	SN74LS161N	IC - 4-BIT BINARY COUNTER
U3	230368	27014	74LS138	IC
U4	230579	27014	74S10	IC - TRIPLE 3 INPUT AND
U5	230639	--	74F74	IC - DIGITAL
U6	230584	27014	74S51	IC - 4-WIDE AND NOR
U7	230616	34335	SN74S161N	IC - 4-BIT BINARY COUNTER
U8	230616	34335	SN74S161N	IC - 4-BIT BINARY COUNTER
U9	230386	27014	74LS273	IC
U10	230579	27014	74S10	IC - TRIPLE 3 INPUT AND
U11	230591	27014	74S04	IC - HEX INVERTING BUFFER
U12	230305	01295	SN74LS08	IC - QUAD, 2 INPUT AND GATES
U13	230621	34649	2115H-2	IC - 1K X 1 RAM
U14	230621	34649	2115H-2	IC - 1K X 1 RAM
U15	230571	34649	2115AL	IC - BIPOLAR - 1K X 1 RAM

REF. DES.	RACAL-DANA P/N	FSC	MFG P/N	DESCRIPTION
U16	230571	34649	2115AL	IC - BIPOLAR - 1K X 1 RAM
U17	230382	27014	74LS161AN	IC
U18	230386	27014	74LS273	IC
U21	230234	01295	SN74LS04N	IC - 14 DIP, HEX INVERTER
U22	230572	34335	93L422	IC - BIPOLAR - 256 X 4 RAM
U23	230572	34335	93L422	IC - BIPOLAR - 256 X 4 RAM
U24	230382	27014	74LS161AN	IC
U25	230386	27014	74LS273	IC
U28	230572	34335	93L422	IC - BIPOLAR - 256 X 4 RAM
U29	230572	34335	93L422	IC - BIPOLAR - 256 X 4 RAM
U30	230421	27014	DM81LS97N	IC
U31	230421	27014	DM81LS97N	IC
W3	600245	--	L-2007-1LP	JUMPER, INSULATED
W4	600245	--	L-2007-1LP	JUMPER, INSULATED
22	411660	21793	411660	PC BOARD, DATA COLLECT (UNSTUFFED)
24	500023	--	--	WIRE, BARE COPPER/TIN, ALPHA 299
27	601073	52072	CA-22SE-10SD	SOCKET, 22P DIP - (4 REQ'D)
28	920735	71785	133-51-02-006	SOCKET, IC - 16P - (2 REQ'D)
29	920734	00779	583527-1	SOCKET, IC - 14P

404298 - UNIVERSAL 8 BIT uP ADAPTOR OPT. 07 A

REF. DES.	RACAL-DANA P/N	FSC	MFG P/N	DESCRIPTION
1	410776	21793	410776	PC BOARD, UNIV. ADAPTOR (UNSTUFFED)
3	454579	21793	454579	ADAPTOR, PROBE
4	454581	21793	454581	COVER, PROBE ADAPTOR
6	615019	--	--	SCREW. PPH, 2-56X.625 (2 REQ'D)
9	920973	21793	920973	LABEL, UNIV. ADAPTOR
11	980573	21793	980573	INSTR. SHEET, UNIV. ADAPTOR

REF. DES.	RACAL-DANA P/N	FSC	MFG P/N	DESCRIPTION
1	404220	21793	404220	PROBE ASSY., 8 BIT uP
2	404249	21793	404249	MODULE ASSY., 40P SOCKET
3	601090	--	--	CABLE ASSY., 40P, DIP CUP
4	601091	--	--	CABLE ASSY., 40P, PLUG
5	601092	--	--	CABLE ASSY., 40P, SOCKET
6	601100	30146	923739-40	CLIP, 40 PIN DIP W/O HEADS

404220 - PROBE ASSEMBLY, 8 BIT uP A

REF. DES.	RACAL-DANA P/N	FSC	MFG P/N	DESCRIPTION
1	401673	21793	401673	PCB ASSY., 8 BIT uP
3	454578	21793	454578	CASE, PROBE, EXT.
4	454580	21793	454580	COVER, PROBE, EXT.
5	454584	21793	454584	RETAINER, PROBE PCB - (4 REQ'D)
8	615019	--	--	MACHINE SCREW, PHILLIPS PANHEAD, 2-56 X .625 - (4 REQ'D)
10	920941	21793	920941	LABEL, 8 BIT uP
11	920953	21793	920953	LABEL, SERIAL NO.

401673 PCB ASSEMBLY, 8 BIT uP C

REF. DES.	RACAL-DANA P/N	FSC	MFG P/N	DESCRIPTION
C1	110126	05397	T368B685M035AS	CAP - TANTA - 6.8 MFD - 35V - 20%
C2	100024	72982	5815-000Y5U104Z	CAP - CERAM - .1 MFD - 25V
C3	100024	72982	5815-000Y5U104Z	CAP - CERAM - .1 MFD - 25V
C4	100024	72982	5815-000Y5U104Z	CAP - CERAM - .1 MFD - 25V
C5	100024	72982	5815-000Y5U104Z	CAP - CERAM - .1 MFD - 25V
C6	100024	72982	5815-000Y5U104Z	CAP - CERAM - .1 MFD - 25V
C7	100024	72982	5815-000Y5U104Z	CAP - CERAM - .1 MFD - 25V
J302	601061	95238	6100-200	CONN RECEPT., 80P
R1	000241	81349	RC07GF241J	RES - CARBON - 240 OHM - 5% - 1/4W
R2	000241	81349	RC07GF241J	RES - CARBON - 240 OHM - 5% - 1/4W
R3	000241	81349	RC07GF241J	RES - CARBON - 240 OHM - 5% - 1/4W
U1	230619	01295	SN74LS368	IC - HEX, TRI-STATE INV. BUFFER
U2	230336	01295	74LS14	IC
U3	230619	01295	SN74LS368	IC - HEX, TRI-STATE INV. BUFFER
U4	230619	01295	SN74LS368	IC - HEX, TRI-STATE INV. BUFFER
U5	230619	01295	SN74LS368	IC - HEX, TRI-STATE INV. BUFFER
U6	230619	01295	SN74LS368	IC - HEX, TRI-STATE INV. BUFFER
U7	230619	01295	SN74LS368	IC - HEX, TRI-STATE INV. BUFFER
U8	230336	01295	74LS14	IC
U9	230336	01295	74LS14	IC
U10	230336	01295	74LS14	IC

REF. DES.	RACAL-DANA P/N	FSC	MFG P/N	DESCRIPTION
U11	230336	01295	74LS14	IC
U12	230336	01295	74LS14	IC
U13	230336	01295	74LS14	IC
U14	230336	01295	74LS14	IC
U15	230577	27014	74LS244	IC - OCTAL BUFFER
U16	230336	01295	74LS14	IC
U17	230577	27014	74LS244	IC - OCTAL BUFFER
U18	230336	01295	74LS14	IC
U19	230336	01295	74LS14	IC
U20	230577	27014	74LS244	IC - OCTAL BUFFER
U21	230577	27014	74LS244	IC - OCTAL BUFFER
Z1	080052	71450	761-3-R470HM	RES - NETWORK - 16P8R, 47 OHM
Z2	080052	71450	761-3-R470HM	RES - NETWORK - 16P8R, 47 OHM
Z3	080052	71450	761-3-R470HM	RES - NETWORK - 16P8R, 47 OHM
Z4	080052	71450	761-3-R470HM	RES - NETWORK - 16P8R, 47 OHM
9	411673	21793	411673	PC BOARD, 8 BIT uP
12	601071	--	--	CABLE, SHIELDED - (2 REQ'D)

404249 - MODULE ASSEMBLY, 40 PIN SOCKET A

REF. DES.	RACAL-DANA P/N	FSC	MFG P/N	DESCRIPTION
1	401687	21793	401687	PCB ASSY., 40 PIN SOCKET
2	454579	21793	454579	ADAPTOR, PROBE
3	454595	21793	454595	COVER, ADAPT, 40 P SOCKET
6	615019	--	--	MACHINE SCREW, PHILLIPS PANHEAD, 2-56 X .625 - (2 REQ'D)
9	920953	21793	920953	LABEL, SERIAL NO., PROBE
10	920957	21793	920957	LABEL, MODULE, 40 P SOCKET

401687 - PCB ASSEMBLY, 40P SOCKET A

REF. DES.	RACAL-DANA P/N	FSC	MFG P/N	DESCRIPTION
1	411687	21793	411687	PC BOARD, 40P SOCKET
3	601097	--	240-4846-00-1107	CONN, 40P, DIP

404225 - GPIB ANALYZER ASSEMBLY, OPT. 48 B

REF. DES.	RACAL-DANA P/N	FSC	MFG P/N	DESCRIPTION
4	404224	21793	404224	PROBE ASSY., GPIB ANALYZER

REF. DES.	RACAL-DANA P/N	FSC	MFG P/N	DESCRIPTION
1	401678	21793	401678	PCB ASSY., GPIB ANALYZER
3	454577	21793	454577	CASE, PROBE, 26 PIN
4	454583	21793	454583	COVER, PROBE, 26 PIN
5	454584	21793	454584	RETAINER, PROBE, PCB - (4 REQ'D)
7	601072	--	--	CABLE ASSY., GPIB DATA
8	615019	--	--	MACHINE SCREW, PHILLIPS PANHEAD, 2-56 X .625 - (4 REQ'D)
10	920940	21793	920940	LABEL, GPIB ANALYZER
11	920953	21793	920953	LABEL, SERIAL NO., PROBE

401678 - PCB ASSEMBLY, GPIB ANALYZER PROBE A

REF. DES.	RACAL-DANA P/N	FSC	MFG P/N	DESCRIPTION
C1	100024	72982	5815-000Y5U104Z	CAP - CERAM - .1 MFD - 25V
C2	100024	72982	5815-000Y5U104Z	CAP - CERAM - .1 MFD - 25V
C3	110126	05397	T368B685M035AS	CAP - TANTA - 6.8 MFD - 35V - 20%
E1-E34	601071	--	--	CABLE, SHIELDED
J304	601059	06776	IDH-26LP-SR3	CONN, 26P, RT ANGLE, HEADER
U1	230459	01295	SN75160	IC - OCTAL GPIB TRANS
U2	230459	01295	SN75160	IC - OCTAL GPIB TRANS
W1	600245	--	L-2007-1LP	JUMPER, INSULATED
W2	600245	--	L-2007-1LP	JUMPER, INSULATED
4	411678	21793	411678	PC BOARD, GPIB ANAL, PROBE (UNSTUFFED)

REF. DES.	RACAL-DANA P/N	FSC	MFG P/N	DESCRIPTION
J5	401663	21793	401663	PCB ASSY., WORD GEN.
4	404222	21793	404222	PROBE ASSY., WORD GEN.
6	610813	52072	CA-16-200-DL	FASTENER, 16P SOCKET

REF. DES.	RACAL-DANA P/N	FSC	MFG P/N	DESCRIPTION
C1	110126	05397	T368B685M035AS	CAP - TANTA - 6.8 MFD - 35V - 20%
C2	100024	72982	5815-000Y5U104Z	CAP - CERAM - .1 MFD - 25V
C3	100024	72982	5815-000Y5U104Z	CAP - CERAM - .1 MFD - 25V
C4	100024	72982	5815-000Y5U104Z	CAP - CERAM - .1 MFD - 25V
C5	100024	72982	5815-000Y5U104Z	CAP - CERAM - .1 MFD - 25V
C6	100024	72982	5815-000Y5U104Z	CAP - CERAM - .1 MFD - 25V
C7	100024	72982	5815-000Y5U104Z	CAP - CERAM - .1 MFD - 25V
C8	100024	72982	5815-000Y5U104Z	CAP - CERAM - .1 MFD - 25V
R1	000472	81349	RC07GF472J	RES - CARBON - 4.7K - 5% - 1/4W
TP1	600786	00779	1-87022-0	POST, MACHINE APPLIED STRIP
U1	230421	27014	DM81LS97N	IC
U2	230550	27014	74LS374N	IC - OCTAL LATCH
U3	230386	27014	74LS273	IC
U4	230428	27014	DM74LS32N	IC
U5	230368	27014	74LS138	IC
U6	230368	27014	74LS138	IC
U7	230493	27014	DM74367N	IC - DIG TRI-STATE BUFFER
U8	230421	27014	DM81LS97N	IC
U9	230550	27014	74LS374N	IC - OCTAL LATCH
U10	230194	01295	SN74LS74N	IC - 14 DIP, DUAL D, FLIP-FLOP
U11	230305	01295	SN74LS08	IC - QUAD, 2 INPUT AND GATES

REF. DES.	RACAL-DANA P/N	FSC	MFG P/N	DESCRIPTION
U12	230194	01295	SN74LS74N	IC - 14 DIP, DUAL D, FLIP-FLOP
U13	230194	01295	SN74LS74N	IC - 14 DIP, DUAL D, FLIP-FLOP
U14	230428	27014	DM74LS32N	IC
13	411663	21793	411663	PC BOARD, WORD GENERATOR (UNSTUFFED)
17	600937	52072	CA-D-P02-26-1-DC-006	CABLE ASSEMBLY

404222 - PROBE ASSEMBLY, WORD GENERATOR A

REF. DES.	RACAL-DANA P/N	FSC	MFG P/N	DESCRIPTION
1	401675	21793	401675	PCB ASSY., WORD GEN PROBE
2	404231	21793	404231	GRABBER KIT, OPT.
3	454576	21793	454576	CASE, PROBE, 20 PIN
4	454584	21793	454584	RETAINER, PROBE - (4 REQ'D)
6	454594	21793	454594	COVER, WORD GEN. PROBE
7	601070	--	--	CABLE ASSY
8	615019	--	--	MACHINE SCREW, PHILLIPS PANHEAD, 2-56 X .625 - (4 REQ'D)
9	920942	21793	920942	LABEL, PROBE, WORD GEN
11	920953	21793	920953	LABEL, SER. NO., PROBE

REF. DES.	RACAL-DANA P/N	FSC	MFG P/N	DESCRIPTION
C1	100024	72982	5815-000Y5U104Z	CAP - CERAM - .1 MFD - 25V
C2	100024	72982	5815-000Y5U104Z	CAP - CERAM - .1 MFD - 25V
C3	100106	56289	10-TS-T10	CAP - CERAM - 100 PFD - 1000V - 10%
C4	100024	72982	5815-000Y5U104Z	CAP - CERAM - .1 MFD - 25V
C5	100099	56289	C030B102F300J	CAP - CERAM - 30 PFD - 1000V - 5%
C6	100116	56289	C023B102E501M	CAP - CERAM - 500 PFD - 1000V - 20%
C7	100024	72982	5815-000Y5U104Z	CAP - CERAM - .1 MFD - 25V
C8	100024	72982	5815-000Y5U104Z	CAP - CERAM - .1 MFD - 25V
C9	110126	05397	T368B685M035AS	CAP - TANTA - 6.8 MFD - 35V - 20%
J303	601060	00779	102160-8	CONN, 34P, RT ANGLE, HEADER
R1	000510	81349	RC07GF510J	RES - CARBON - 51 OHM - 5% - 1/4W
R2	000510	81349	RC07GF510J	RES - CARBON - 51 OHM - 5% - 1/4W
R3	000104	81349	RC07GF104J	RES - CARBON - 100K - 5% - 1/4W
R4	040250	73138	72PX50K	POT - CERMET - 50K - 20% - .5W
R5	010823	81349	RN55C4021F	RES - METAL - 4.02K - 1% - 1/10W
R6	000431	81349	RC07GF431J	RES - CARBON - 430 OHM - 5% - 1/4W
R7	000511	81349	RC07GF511J	RES - CARBON - 510 OHM - 5% - 1/4W
R8	000471	81349	RC07GF471J	RES - CARBON - 470 OHM - 5% - 1/4W
R9	000103	81349	RC07GF103J	RES - CARBON - 10K - 5% - 1/4W
S1	600917	79727	G-128L/G-02-30-3/ G-20-34	SWITCH, SLIDE - 2 P3T

REF. DES.	RACAL-DANA P/N	FSC	MFG P/N	DESCRIPTION
S2	600916	79727	GF-126/G-02-30-3/ G-20-39	SWITCH, SLIDE - 2P2T
TP1	600786	00779	1-87022-0	POST, MACHINE APPLIED STRIP
TP2	600786	00779	1-87022-0	POST, MACHINE APPLIED STRIP
TP3	600786	00779	1-87022-0	POST, MACHINE APPLIED STRIP
U1	230105	01295	SN7417	IC
U2	230105	01295	SN7417	IC
U3	230105	01295	SN7417	IC
U4	230575	04713	8T98	IC - HEX BUFFER
U5	230237	01295	SN74LS123N	IC - DUAL ONE SHOT, PLASTIC
U6	230386	27014	74LS273	IC
U7	230386	27014	74LS273	IC
W1	600245	--	L-2007-1LP	JUMPER, INSULATED
W4	600245	--	L-2007-1LP	JUMPER, INSULATED
Z1	080050	71450	750-101-470 OHM	RES - NETWORK, 10P 9R, 470 OHM
Z2	080050	71450	750-101-470 OHM	RES - NETWORK, 10P 9R, 470 OHM
21	411675	21793	411675	PC BOARD, WORD GEN PROBE (UNSTUFFED)
30	601071	21793	601071	CABLE, SHIELDED

REF. DES.	RACAL-DANA P/N	FSC	MFG P/N	DESCRIPTION
J9	401684	21793	401684	PCB ASSY, NON-VOL

REF. DES.	RACAL-DANA P/N	FSC	MFG P/N	DESCRIPTION
C1	110126	05397	T368B685M035AS	CAP - TANTA - 6.8 MFD - 35V - 20%
C2	100024	72982	5815-000Y5U104Z	CAP - CERAM - .1 MFD - 25V
C3	100024	72982	5815-000Y5U104Z	CAP - CERAM - .1 MFD - 25V
C4	100024	72982	5815-000Y5U104Z	CAP - CERAM - .1 MFD - 25V
C5	100024	72982	5815-000Y5U104Z	CAP - CERAM - .1 MFD - 25V
C6	110194	--	--	CAP - ELECT - 470 MFD - 50V - RADIAL LEAD
C7	110194	--	--	CAP - ELECT - 470 MFD - 50V - RADIAL LEAD
C8	100024	72982	5815-000Y5U104Z	CAP - CERAM - .1 MFD - 25V
C9	100024	72982	5815-000Y5U104Z	CAP - CERAM - .1 MFD - 25V
C10	110126	05397	T368B685M035AS	CAP - TANTA - 6.8 MFD - 35V - 20%
C11	110017	05397	T310A105K035AS	CAP - TANTA - 1 MFD - 35V - 10%
C12	100024	72982	5815-000Y5U104Z	CAP - CERAM - .1 MFD - 25V
C13	100024	72982	5815-000Y5U104Z	CAP - CERAM - .1 MFD - 25V
C14	120278	27556	XA2B563J	CAP - MYLAR - .056 MFD - 100V - 5%
C15	100024	72982	5815-000Y5U104Z	CAP - CERAM - .1 MFD - 25V
C16	100024	72982	5815-000Y5U104Z	CAP - CERAM - .1 MFD - 25V
CR1	210004	81349	1N4004	DIODE - SILICO
CR2	210004	81349	1N4004	DIODE - SILICO
CR3	211083	81349	1N916B	DIODE - SILICO
CR4	220086	04713	1N748A	DIODE - ZENER - 3.9V - 5%
CR5	211083	81349	1N916B	DIODE - SILICO

REF. DES.	RACAL-DANA P/N	FSC	MFG P/N	DESCRIPTION
CR6	211083	81349	1N916B	DIODE - SILICO
CR7	211083	81349	1N916B	DIODE - SILICO
CR8	220011	81349	1N968B	DIODE - SILICO - ZENER
Q1	200119	80131	2N3565	TRANS
Q2	200200	21793	200200	TRANS - NPN
Q3	200239	01295	TIS99	TRANS - NPN
R1	030007	44655	4396	RES - WW - 150 OHM - 5% - 3W
R2	000103	81349	RC07GF103J	RES - CARBON - 10K - 5% - 1/4W
R3	000222	81349	RC07GF222J	RES - CARBON - 2.2K - 5% - 1/4W
R4	000470	81349	RC07GF470J	RES - CARBON - 47 OHM - 5% - 1/4W
R5	000823	81349	RC07GF823J	RES - CARBON - 82K - 5% - 1/4W
R6	000101	81349	RC07GF101J	RES - CARBON - 100 OHM - 5% - 1/4W
R7	010091	81349	RN60D1102J	RES - METAL - 11K - T-0
R8	000821	81349	RC07GF821J	RES - CARBON - 820 OHM - 5% - 1/4W
R9	000103	81349	RC07GF103J	RES - CARBON - 10K - 5% - 1/4W
R10	000153	81349	RC07GF153J	RES - CARBON - 15K - 5% - 1/4W
R11	000472	81349	RC07GF472J	RES - CARBON - 4.7K - 5% - 1/4W
R12	040173	73138	89PV5K	POT - CERMET - 5K
R13	000102	81349	RC07GF102J	RES - CARBON - 1K - 5% - 1/4W
S1	601087	79727	G-02-82-2	SWITCH, MOUNT, SPDT, RIGHT ANGLE
S2	601087	79727	G-02-82-2	SWITCH, MOUNT, SPDT, RIGHT ANGLE

REF. DES.	RACAL-DANA P/N	FSC	MFG P/N	DESCRIPTION
TP1	600786	00779	1-87022-0	POST, MACHINE APPLIED STRIP
TP2	600786	00779	1-87022-0	POST, MACHINE APPLIED STRIP
TP3	600786	00779	1-87022-0	POST, MACHINE APPLIED STRIP
TP4	600786	00779	1-87022-0	POST, MACHINE APPLIED STRIP
TP5	600786	00779	1-87022-0	POST, MACHINE APPLIED STRIP
TP6	600786	00779	1-87022-0	POST, MACHINE APPLIED STRIP
TP8	600786	00779	1-87022-0	POST, MACHINE APPLIED STRIP
U1	230386	27014	74LS273	IC
U2	230577	27014	74LS244	IC - OCTAL BUFFER
U3	230550	27014	74LS374N	IC - OCTAL LATCH
U4	230386	27014	74LS273	IC
U5	230356	27014	74LS175	IC
U6	230393	27014	LM340T-24	IC
U7	230368	27014	74LS138	IC
U8	230608	27014	SN74LS13N	IC - DUAL 4-INPUT POS NAND - SCHMITT TRIGGERS
U12	230357	--	74LS73N	IC - FLIP-FLOP
U13	230133	07263	74121	IC - PLASTIC
U14	230609	27014	SN7406N	IC - HEX INVERTER
U15	230604	27014	LM358	IC - LOW PWR DUAL OP-AMP
U16	230608	27014	SN74LS13N	IC - OVAL 4-INPUT POS NAND - SCHMITT TRIGGERS
U17	230509	27014	74LS132N	IC - DIGITAL

REF. DES.	RACAL-DANA P/N	FSC	MFG P/N	DESCRIPTION
U18	230509	27014	74LS132N	IC - DIGITAL
U19	230605	27014	P2816	IC - E^2 PROM, 2K X 8
U20	230605	27014	P2816	IC - E^2 PROM, 2K X 8
U21	230605	27014	P2816	IC - E^2 PROM, 2K X 8
W1	601023	98291	026-4802	PLUG - JUMPER
W2	601023	98291	026-4802	PLUG - JUMPER
W3	601023	98291	026-4802	PLUG - JUMPER
Z1	080020	11236	750-81-R10KOHM	RES - CERMET - 10K - NETWORK - 8P,7R - 2%
Z2	080015	91637	CSP-10E-01103J	RES - CERMET - 10K - NETWORK - 8P,7R - 5%
48	411684	21793	411684	PC BOARD, NON-VOL (UNSTUFFED)
54	601106	13103	G107B-14	HEATSINK-TO220
56	610851	18565	60-11-5791-1674	WASHER
57	615043	--	--	MACHINE SCREW, PHILLIPS PANHEAD, 4-40 X .312
58	617004	--	--	HEX NUT (STD), #4-40
59	617102	--	--	WASHER FLAT (LIGHT SERIES), #4
61	617127	--	--	WASHER LOCK (LIGHT SERIES), #4
62	601125	52072	CA-08SE-TSD	CONN DIP, 8P
63	920624	71785	133-59-02-063	SOCKET, IC - 24P - (6 REQ'D)

REF. DES.	RACAL-DANA P/N	FSC	MFG P/N	DESCRIPTION
J10	401666	21793	401666	PCB ASSY., GPIB INTERFACE
4	615058	--	--	MACHINE SCREW, PPH, 6-32 X .312 (2 REQ'D)
5	617128	--	--	LOCK WASHER (LIGHT SERIES), #6 - (2 REQ'D)

REF. DES.	RACAL-DANA P/N	FSC	MFG P/N	DESCRIPTION
J10	401666	21793	401666	PCB ASSY., GPIB INTERFACE
U40	230677	--	SYP2316	IC - MEMORY, 2316, ROM, U40
U41	230600	--	SYP2332	IC - 4K X 8 ROM
4	615058	--	--	MACHINE SCREW, PHILLIPS PANHEAD, 6-32 X .312 (2 REQ'D)
5	617128	--	--	LOCK WASHER (LIGHT SERIES), #6 - (2 REQ'D)

REF. DES.	RACAL-DANA P/N	FSC	MFG P/N	DESCRIPTION
C1	110126	05397	T368B685M035AS	CAP - TANTA - 6.8 MFD - 35V - 20%
C2	110126	05397	T368B685M035AS	CAP - TANTA - 6.8 MFD - 35V - 20%
C3	100024	72982	5815-000Y5U104Z	CAP - CERAM - .1 MFD - 25V
C4	100024	72982	5815-000Y5U104Z	CAP - CERAM - .1 MFD - 25V
C5	100024	72982	5815-000Y5U104Z	CAP - CERAM - .1 MFD - 25V
C6	100024	72982	5815-000Y5U104Z	CAP - CERAM - .1 MFD - 25V
C7	100017	56289	C023B101F103M	CAP - CERAM - 01. MFD - 100V - 20%
C8	100024	72982	5815-000Y5U104Z	CAP - CERAM - .1 MFD - 25V
C9	100024	72982	5815-000Y5U104Z	CAP - CERAM - .1 MFD - 25V
C10	110023	05397	T310B225K035AS	CAP - TANTA- 2.2 MFD - 35V - 10%
C11	110126	05397	T368B685M035AS	CAP - TANTA - 6.8 MFD - 35V - 20%
C12	100024	72982	5815-000Y5U104Z	CAP - CERAM - .1 MFD - 25V
C13	100024	72982	5815-000Y5U104Z	CAP - CERAM - .1 MFD - 25V
J205	600957	00779	552791-1	RECEPTACLE - 24 POS
R1	000511	81349	RC07GF511J	RES - CARBON - 510 OHM - 5% - 1/4W
R2	000431	81349	RC07GF431J	RES - CARBON - 430 OHM - 5% - 1/4W
R3	000472	81349	RC07GF472J	RES - CARBON - 4.7K - 5% - 1/4W
R4	000472	81349	RC07GF472J	RES - CARBON - 4.7K - 5% - 1/4W
R5	000103	81349	RC07GF103J	RES - CARBON - 10K - 5% - 1/4W
R6	000510	81349	RC07GF510J	RES - CARBON - 51 OHM - 5% - 1/4W
R7	000472	81349	RC07GF472J	RES - CARBON - 4.7K - 5% - 1/4W
R8	000472	81349	RC07GF472J	RES - CARBON - 4.7K - 5% - 1/4W

REF. DES.	RACAL-DANA P/N	FSC	MFG P/N	DESCRIPTION
R9	000223	81349	RC07GF223J	RES - CARBON - 22K - 5% - 1/4W
R10	000393	81349	RC07GF393J	RES - CARBON - 39K - 5% - 1/4W
S200-205	600814	11237	206-6	SWITCH - 6 SPST
TP1	600786	00779	1-87022-0	POST, MACHINE APPLIED STRIP
TP2	600786	00779	1-87022-0	POST, MACHINE APPLIED STRIP
TP3	600786	00779	1-87022-0	POST, MACHINE APPLIED STRIP
U1	230422	34355	AM8304B	IC - OCTAL
U2	230194	01295	SN74LS74N	IC - 14 DIP, DUAL D, FLIP-FLOP
U3	230368	27014	74LS138	IC
U4	230421	27014	DM81LS97N	IC
U5	230430	04713	MC68488L	IC
U6	230459	01295	SN75160	IC - OCTAL GPIB TRANS
U7	230368	27014	74LS138	IC
U8	230472	01295	SN75161	IC - OCTAL GPIB TRANS
U9	230237	01295	SN74LS123N	IC - DUAL ONE SHOT, PLASTIC
U10	230306	01295	SN74LS02	IC - QUAD, 2 INPUT NOR GATES
U11	230371	27014	4053BN	IC
U12	230428	27014	DM74LS32N	IC
U13	230192	01295	SN74LS05N	IC - 14 DIP, INVERTER
Z1	080023	11236	750-81-R4.7KOHM	RES - CERMET - 4.7K - NETWORK - 8P,7R - 2%

REF. DES.	RACAL-DANA P/N	FSC	MFG P/N	DESCRIPTION
Z2	080023	11236	750-81-R4.7KOHM	RES - CERMET - 4.7K - NETWORK - 8P,7R - 2%
Z3	080032	11236	750-100-R.47KOHM	RES - CERMET - 4.7K - NETWORK - 10P,9R
26	411666	21793	411666	PC BOARD, GPIB INTERFACE (UNSTUFFED)
31	920857	52072	CA-14S-10RAC1-02	SOCKET, 14P, RT ANGLE, DIP
32	600823	52072	40S-TSD-BD	SOCKET - DIP TYPE - 40P
33	454565	21793	454565	BRACKET, GPIB
34	630011	00779	552633-4	STANDOFF, STUD MOUNT
35	610893	19738	1141-0310	RIVET, BRASS, .095 DIA X 5/16L (2 REQ'D)

404299 - DEDICATED KIT ASSEMBLY, OPT. 68 A

REF. DES.	RACAL-DANA P/N	FSC	MFG P/N	DESCRIPTION
1	230685	21793	230685	IC, MEMORY, DIS6800, EPROM
2	230686	21793	230686	IC, MEMORY, DIS6809, EPROM
4	404238	21793	404238	ADAPTOR ASSEMBLY, 6802
5	404239	21793	404239	ADAPTOR ASSEMBLY, 6809

REF. DES.	RACAL-DANA P/N	FSC	MFG P/N	DESCRIPTION
1	230681	21793	230681	IC, MEMORY, DIS6800A, EPROM
2	230682	21793	230682	IC, MEMORY, DIS6800B, EPROM
3	230683	21793	230683	IC, MEMORY, DIS6809A, EPROM
4	230684	21793	230684	IC, MEMORY, DIS6809B, EPROM
6	404238	21793	404238	ADAPTOR ASSEMBLY, 6802
7	404239	21793	404239	ADAPTOR ASSEMBLY, 6809

404238 - ADAPTOR ASSEMBLY, 6802 A

REF. DES.	RACAL-DANA P/N	FSC	MFG P/N	DESCRIPTION
1	401685	21793	401685	PCB ASSEMBLY, 6800-6802
3	454579	21793	454579	ADAPTOR PROBE
4	454581	21793	454581	COVER, PROBE ADAPTOR
6	615019	--	--	SCREW, PPH, 2-56X.625 (2 REQ'D)
9	920947	21793	920947	LABEL, 6802 ADAPTOR
10	920953	21793	920953	LABEL, SERIAL NO., PROBE

401685 - PCB ASSEMBLY, 6800/6802 A

REF. DES.	RACAL-DANA P/N	FSC	MFG P/N	DESCRIPTION
C1	100062	72982	8121-100-W5R0-103K	CAP, CERAM, .01 MFD, 100V, 10%
C2	110143	05397	T368A105M035AS	CAP, TANTA, 1 MFD, 35V, 20%
R1	000470	81349	RC07GF470J	RES, CARBON, 47 OHM, 5%, 1/4W
R2	000470	81349	RC07GF470J	RES, CARBON, 47 OHM, 5%, 1/4W
R3	000470	81349	RC07GF470J	RES, CARBON, 47 OHM, 5%, 1/4W
R4	000102	81349	RC07GF102J	RES, CARBON, 1 K, 5%, 1/4W
U1	230509	27014	74LS132N	IC, DIGITAL
U2	230575	04713	8T98	IC, HEX BUFFER
W1	600245	--	L-2007-1LP	JUMPER, INSULATED
W3	600245	--	L-2007-1LP	JUMPER, INSULATED
W4	600245	--	L-2007-1LP	JUMPER, INSULATED
16	411685	21793	411685	PC BOARD, 6800-6802 (UNSTUFFED)

404239 - ADAPTOR ASSEMBLY, 6809 A

REF. DES.	RACAL-DANA P/N	FSC	MFG P/N	DESCRIPTION
1	401686	21793	401686	PCB ASSEMBLY, 6809 ADAPTOR
3	454579	21793	454579	ADAPTOR, PROBE
4	454581	21793	454581	COVER, PROBE ADAPTOR
6	615019	--	--	SCREW, PH, 2-56X.625 (2 REQ'D)
9	920948	21793	920948	LABEL, 6809 ADAPTOR
10	920953	21793	920953	LABEL, SERIAL NO., PROBE

401686 - PCB ASSEMBLY, 6809 ADAPTOR A

REF. DES.	RACAL-DANA P/N	FSC	MFG P/N	DESCRIPTION
C1	100062	72982	8121-100-W5R0-103K	CAP, CERAM, .01 MFD, 100V, 10%
C2	110143	05397	T368A105M035AS	CAP, ANTA, 1 MFD, 35V, 20%
R1	000470	81349	RC07GF470J	RES, CARBON, 47 OHM, 5%, 1/4W
R2	000102	81349	RC07GF102J	RES, CARBON, 1K, 5%, 1/4W
R3	000470	81349	RC07GF470J	RES, CARBON, 47 OHM, 5%, 1/4W
U1	230194	01295	SN74LS74N	IC, 14 DIP, DUAL D FLIP-FLOP
U2	230509	27014	74LS132N	IC, DIGITAL
16	411686	21793	411686	PC BOARD, 6809 ADAPTOR (UNSTUFFED)

REF. DES.	RACAL-DANA P/N	FSC	MFG P/N	DESCRIPTION
1	920364	75915	313.001S	FUSE, SLO-BLO, LAMP - 1A

REF. DES.	RACAL-DANA P/N	FSC	MFG P/N	DESCRIPTION
1	230680	21793	230680	IC - MEMORY, 2716, PROM
3	404230	21793	404230	ADAPTOR ASSEMBLY, 8080
4	404241	21793	404241	ADAPTOR ASSEMBLY, 8085

REF. DES.	RACAL-DANA P/N	FSC	MFG P/N	DESCRIPTION
1	230603	01295	P2716	IC - DISASSEMBLER, 8080/8085
3	404230	21793	404230	ADAPTOR ASSEMBLY, 8080
4	404241	21793	404241	ADAPTOR ASSEMBLY, 8085

REF. DES.	RACAL-DANA P/N	FSC	MFG P/N	DESCRIPTION
1	401676	21793	401676	PCB ASSY., 8080 ADAPTOR
3	454579	21793	454579	ADAPTOR, PROBE
4	454581	21793	454581	COVER, PROBE ADAPTOR
6	615019	--	--	MACHINE SCREW, PHILLIPS PANHEAD, 2-56 X .625 (2 REQ'D)
8	920949	21793	920949	LABEL, 8080 ADAPTOR
10	920953	21793	920953	LABEL, SERIAL NO., PROBE

401676 - PCB ASSEMBLY, 8080 ADAPTOR C

REF. DES.	RACAL-DANA P/N	FSC	MFG. P/N	DESCRIPTION
C1	100062	72982	8121-100-W5R0-103K	CAP - CERAM - .01 MFD - 100V - 10%
C2	110143	05397	T368A105M035AS	CAP - TANTA - 1 MFD - 35V - 20%
Q1	200271	17856	VN10KM	TRANS FET, PWR
R1	000511	81349	RC07GF511J	RES - CARBON - 510 OHM - 5% - 1/4W
R2	000105	81349	RC07GF105J	RES - CARBON - 1M - 5% - 1/4W
R3	000102	81349	RC07GF102J	RES - CARBON - 1K - 5% - 1/4W
U1	230336	01295	74LS14	IC
U2	230194	01295	SN74LS74N	IC - 14 DIP, DUAL D, FLIP-FLOP
U3	230509	27014	74LS132N	IC - DIGITAL
U4	230194	01295	SN74LS74N	IC
Z1	080059	01121	110B470	RES - CERMET - ARRAY - 5R - 47 OHM
13	411676	21793	411676	PC BOARD, 8080 ADAPTOR (UNSTUFFED)

404241 - ADAPTOR ASSEMBLY, 8085 OPT. A

REF. DES.	RACAL-DANA P/N	FSC	MFG. P/N	DESCRIPTION
1	401677	21793	401677	PCB ASSY., 8085 ADAPTOR
3	454579	21793	454579	ADAPTOR, PROBE
4	454581	21793	454581	COVER, PROBE ADAPTOR
6	615019	--	--	MACHINE SCREW, PHILLIPS PANHEAD, 2-56 X .625 - (2 REQ'D)
8	920950	21793	920950	LABEL, 8085 ADAPTOR
10	920953	21793	920953	LABEL, SERIAL NO., PROBE

REF. DES.	RACAL-DANA P/N	FSC	MFG. P/N	DESCRIPTION
C1	100062	72982	8121-100-W5R0-103K	CAP - CERAM - .01 MFD - 100V - 10%
C2	110143	05397	T368A105M035AS	CAP - TANTA - 1 MFD - 35V - 20%
R1	000471	81349	RC07GF471J	RES - CARBON - 470 OHM - 5% - 1/4W
U1	230336	01295	74LS14	IC
U2	230561	27014	74LS393	IC
U3	230248	01295	SN74LS10N	IC - POSITIVE NAND GATE
Z1	080049	81349	760-3-47	RES - NETWORK - 14 PIN - 47 OHM
Z2	080049	81349	760-3-47	RES - NETWORK - 14 PIN - 47 OHM
8	411677	21793	411677	PC BOARD, 8085 ADAPTOR (UNSTUFFED)

REF. DES.	RACAL-DANA P/N	FSC	MFG. P/N	DESCRIPTION
1	230691	21793	230691	IC, MEMORY, DISZ80, EPROM
3	404249	21793	404249	MODULE ASSY, 40P SKT
4	404296	21793	404296	PROBE ASSY, Z80 uP
6	601090	21793	601090	CABLE ASSY, 40P, DIP CLIP
7	601091	21793	601091	CABLE ASSY, 40P, PLUG
8	601092	21793	601092	CABLE ASSY, 40P, SOCKET
9	601100	30146	923739-40	CLIP, 40P, DIP, W/O HEADS

REF. DES.	RACAL-DANA P/N	FSC	MFG. P/N	DESCRIPTION
1	230687	21793	230687	IC, MEMORY, DIS Z80A, EPROM
2	230688	21793	230688	IC, MEMORY, DIS Z80B, EPROM
4	404249	21793	404249	MODULE ASSY., 40P SKT
5	404296	21793	404296	PROBE ASSY., Z80 uP
7	601090	21793	601090	CABLE ASSY, 40P DIP
8	601091	21793	601091	CABLE ASSY., 40P DIP
9	601092	21793	601092	CABLE ASSY., 40P SKT
10	601100	30146	923739-40	CLIP, 40P, DIP, W/O HEADS

401296 - PCB ASSEMBLY, Z80 uP A

REF. DES.	RACAL-DANA P/N	FSC	MFG. P/N	DESCRIPTION
1	401708	21793	401708	PCB ASSEMBLY, Z80 uP
3	454710	21793	454710	CASE, EXT. PROBE, MOD.
4	454711	21793	454711	COVER, EXT. PROBE, MOD.
7	615019	--	--	SCREW, PPH, 2-56X.625 (4 REQ'D)
9	920953	21793	920953	LABEL, SERIAL NO., PROBE
11	920972	21793	920972	LABEL, PROBE, Z80 uP

REF. DES.	RACAL-DANA P/N	FSC	MFG. P/N	DESCRIPTION
C1	100062	72982	8121-100-W5R0-103K	CAP, CERAM, .01 MFD, 100V, 10%
C2	100062	72982	8121-100-W5R0-103K	CAP, CERAM, .01 MFD, 100V, 10%
C3	100062	72982	8121-100-W5R0-103K	CAP, CERAM, .01 MFD, 100V, 10%
C4	100062	72982	8121-100-W5R0-103K	CAP, CERAM, .01 MFD, 100V, 10%
C5	100062	72982	8121-100-W5R0-103K	CAP, CERAM, .01 MFD, 100V, 10%
C6	100062	72982	8121-100-W5R0-103K	CAP, CERAM, .01 MFD, 100V, 10%
C7	110126	05397	T368B685M035AS	CAP, TANTA, 6.8 MFD, 35V, 20%
C8	110126	05397	T368B685M035AS	CAP, TANTA, 6.8 MFD, 35V, 20%
C9	100062	72982	8121-100-W5R0-103K	CAP, CERAM, .01 MFD, 100V, 10%
C10	100062	72982	8121-100-W5R0-103K	CAP, CERAM, .01 MFD, 100V, 10%
C11	100062	72982	8121-100-W5R0-103K	CAP, CERAM, .01 MFD, 100V, 10%
C12	110126	05397	T368B685M035AS	CAP, CERAM, .01 MFD, 100V, 10%
CR1	211083	81349	1N916B	DIODE, SILICO, 1N916B
CR2	211083	81349	1N916B	DIODE, SILICO, 1N916B
CR3	211083	81349	1N916B	DIODE, SILICO, 1N916B
DL1	230679	92912	0447-0025-02	IC, DIGITAL, DELAY LINE
P100	601071	21793	601071	CABLE, SHIELDED
P102	601071	21793	601071	CABLE, SHIELDED
Q1	200099	81349	2N4258	TRANS, PNP
Q2	200256	80131	2N3646	TRANS, FALLOUT

REF. DES.	RACAL-DANA P/N	FSC	MFG. P/N	DESCRIPTION
R1	000222	81349	RC07GF222J	RES, CARBON, 2.2K, 5%, 1/4W
R2	000100	81349	RC07GF100J	RES, CARBON, 10 OHM, 5%, 1/4W
R3	000100	81349	RC07GF100J	RES, CARBON, 10 OHM, 5%, 1/4W
R4	000222	81349	RC07GF222J	RES, CARBON, 2.2K, 5%, 1/4W
U1	230577	27014	74LS244	IC, OCTAL BUFFER
U2	230550	27014	74LS374N	IC, OCTAL LATCH
U3	230550	27014	74LS374N	IC, OCTAL LATCH
U4	230550	27014	74LS374N	IC, OCTAL LATCH
U5	230550	27014	74LS374N	IC, OCTAL LATCH
U6	230678	01295	74LS11N	IC, DIGITAL
U7	230540	01295	SN74S86N	IC, DIGITAL
U8	230194	01295	SN74LS74N	IC, 14 DIP, DUAL D FLIP-FLOP
U9	230194	01295	SN74LS74N	IC, 14 DIP, DUAL D FLIP-FLOP
U10	230194	01295	SN74LS74N	IC, 14 DIP, DUAL D FLIP-FLOP
W1	500023	--	--	WIRE, BARE COPPER/TIN, ALPHA 299, 24GA
Z1	080049	81349	760-3-47	RES, NETWORK, 14 PIN, 47 OHM
Z2	080049	81349	760-3-47	RES, NETWORK, 14 PIN, 47 OHM
Z3	080049	81349	760-3-47	RES, NETWORK, 14 PIN, 47 OHM
Z4	080049	81349	760-3-47	RES, NETWORK, 14 PIN, 47 OHM
Z5	080049	81349	760-3-47	RES, NETWORK, 14 PIN, 47 OHM

REF. DES.	RACAL-DANA P/N	FSC	MFG. P/N	DESCRIPTION
Z6	080060	01121	106B222	RES, ARRAY, 3 RES, 2.2K
24	411708	21793	411708	PCB, Z80 uP PROBE (UNSTUFFED)
25	500023	--	--	WIRE, BARE COPPER/TIN, ALPHA 299, 24GA

REF. DES.	RACAL-DANA P/N	FSC	MFG. P/N	DESCRIPTION
1	401671	21793	401671	PCB ASSY., VAR. THRESHOLD
2	404231	21793	404231	GRABBER KIT, OPT.
3	454576	21793	454576	CASE, PROBE, 20 PIN
4	454584	21793	454584	RETAINER, PROBE PCB - (4 REQ'D)
6	454593	21793	454593	COVER, VAR. THRESHOLD PROBE
7	601070	21793	601070	CABLE ASSY.
8	615019	--	--	MACHINE SCREW, PHILLIPS PANHEAD 2-56 X .625 - (4 REQ'D)
9	920944	21793	920944	LABEL, PROBE, VAR. THRESHOLD
11	920953	21793	920953	LABEL, SERIAL NO., PROBE

REF. DES.	RACAL-DANA P/N	FSC	MFG. P/N	DESCRIPTION
C1	100081	56289	C030B102E4R7D	CAP - CERAM - 4.7 PFD - 1000V - 5%
C2	100081	56289	C030B102E4R7D	CAP - CERAM - 4.7 PFD - 1000V - 5%
C3	100081	56289	C030B102E4R7D	CAP - CERAM - 4.7 PFD - 1000V - 5%
C4	100081	56289	C030B102E4R7D	CAP - CERAM - 4.7 PFD - 1000V - 5%
C5	100081	56289	C030B102E4R7D	CAP - CERAM - 4.7 PFD - 1000V - 5%
C6	100081	56289	C030B102E4R7D	CAP - CERAM - 4.7 PFD - 1000V - 5%
C7	100081	56289	C030B102E4R7D	CAP - CERAM - 4.7 PFD - 1000V - 5%
C8	100081	56289	C030B102E4R7D	CAP - CERAM - 4.7 PFD - 1000V - 5%
C9	100081	56289	C030B102E4R7D	CAP - CERAM - 4.7 PFD - 1000V - 5%
C10	100081	56289	C030B102E4R7D	CAP - CERAM - 4.7 PFD - 1000V - 5%
C11	100081	56289	C030B102E4R7D	CAP - CERAM - 4.7 PFD - 1000V - 5%
C12	100081	56289	C030B102E4R7D	CAP - CERAM - 4.7 PFD - 1000V - 5%
C13	100081	56289	C030B102E4R7D	CAP - CERAM - 4.7 PFD - 1000V - 5%
C14	100081	56289	C030B102E4R7D	CAP - CERAM - 4.7 PFD - 1000V - 5%
C15	100081	56289	C030B102E4R7D	CAP - CERAM - 4.7 PFD - 1000V - 5%
C16	100081	56289	C030B102E4R7D	CAP - CERAM - 4.7 PFD - 1000V - 5%
C17	100081	56289	C030B102E4R7D	CAP - CERAM - 4.7 PFD - 1000V - 5%
C18	100081	56289	C030B102E4R7D	CAP - CERAM - 4.7 PFD - 1000V - 5%
C19	100081	56289	C030B102E4R7D	CAP - CERAM - 4.7 PFD - 1000V - 5%
C20	100133	72982	8131LP-100-651-104M	CAP - CERAM - .1 MFD - LOW PROFILE 20%
C21	100133	72982	8131LP-100-651-104M	CAP - CERAM - .1 MFD - LOW PROFILE 20%

REF. DES.	RACAL-DANA P/N	FSC	MFG. P/N	DESCRIPTION
C22	100133	72982	8131LP-100-651-104M	CAP - CERAM - .1 MFD - LOW PROFILE 20%
C23	100133	72982	8131LP-100-651-104M	CAP - CERAM - .1 MFD - LOW PROFILE 20%
C24	100133	72982	8131LP-100-651-104M	CAP - CERAM - .1 MFD - LOW PROFILE 20%
C25	100133	72982	8131LP-100-651-104M	CAP - CERAM - .1 MFD - LOW PROFILE 20%
C26	100133	72982	8131LP-100-651-104M	CAP - CERAM - .1 MFD - LOW PROFILE 20%
C27	100133	72982	8131LP-100-651-104M	CAP - CERAM - .1 MFD - LOW PROFILE 20%
C28	100133	72982	8131LP-100-651-104M	CAP - CERAM - .1 MFD - LOW PROFILE 20%
C29	100133	72982	8131LP-100-651-104M	CAP - CERAM - .1 MFD - LOW PROFILE 20%
C30	100133	72982	8131LP-100-651-104M	CAP - CERAM - .1 MFD - LOW PROFILE 20%
C31	100133	72982	8131LP-100-651-104M	CAP - CERAM - .1 MFD - LOW PROFILE 20%
C32	100133	72982	8131LP-100-651-104M	CAP - CERAM - .1 MFD - LOW PROFILE 20%
C33	100133	72982	8131LP-100-651-104M	CAP - CERAM - .1 MFD - LOW PROFILE 20%
C34	100133	72982	8131LP-100-651-104M	CAP - CERAM - .1 MFD - LOW PROFILE 20%
C35	110126	05397	T368B685M035AS	CAP - TANTA - 6.8 MFD - 35V - 20%
C36	110126	05397	T368B685M035AS	CAP - TANTA - 6.8 MFD 35V - 20%
C37	100133	72982	8131LP-100-651-104M	CAP - CERAM - .1 MFD - LOW PROFILE 20%

REF. DES.	RACAL-DANA P/N	FSC	MFG. P/N	DESCRIPTION
CR1	211083	81349	1N916B	DIODE - SILICO
CR2	211083	81349	1N916B	DIODE - SILICO
CR3	211083	81349	1N916B	DIODE - SILICO
J301	601060	06776	IDH-20LP-SR3	CONN - 20P, RT ANGLE, HEADER
Q1	200099	81349	2N4258	TRANS - PNP
Q2	200256	80131	2N3646	TRANS - FALLOUT
R1	010633	81349	RN55C3012F	RES - METAL - 30.1K - 1% - 1/10W
R2	010633	81349	RN55C3012F	RES - METAL - 30.1K - 1% - 1/10W
R3	010633	81349	RN55C3012F	RES - METAL - 30.1K - 1% - 1/10W
R4	010633	81349	RN55C3012F	RES - METAL - 30.1K - 1% - 1/10W
R5	010633	81349	RN55C3012F	RES - METAL - 30.1K - 1% - 1/10W
R6	010633	81349	RN55C3012F	RES - METAL - 30.1K - 1% - 1/10W
R7	010633	81349	RN55C3012F	RES - METAL - 30.1K - 1% - 1/10W
R8	010633	81349	RN55C3012F	RES - METAL - 30.1K - 1% - 1/10W
R9	010633	81349	RN55C3012F	RES - METAL - 30.1K - 1% - 1/10W
R10	010633	81349	RN55C3012F	RES - METAL - 30.1K - 1% - 1/10W
R11	010633	81349	RN55C3012F	RES - METAL - 30.1K - 1% - 1/10W
R12	010633	81349	RN55C3012F	RES - METAL - 30.1K - 1% - 1/10W
R13	010633	81349	RN55C3012F	RES - METAL - 30.1K - 1% - 1/10W
R14	010633	81349	RN55C3012F	RES - METAL - 30.1K - 1% - 1/10W
R15	010633	81349	RN55C3012F	RES - METAL - 30.1K - 1% - 1/10W

REF. DES.	RACAL-DANA P/N	FSC	MFG. P/N	DESCRIPTION
R16	010633	81349	RN55C3012F	RES - METAL - 30.1K - 1% - 1/10W
R17	010633	81349	RN55C3012F	RES - METAL - 30.1K - 1% - 1/10W
R18	010633	81349	RN55C3012F	RES - METAL - 30.1K - 1% - 1/10W
R19	010676	81349	RN55C1502F	RES - METAL - 15K - 1% - 1/10W
R20	010633	81349	RN55C3012F	RES - METAL - 30.1K - 1% - 1/10W
R21	012106	81349	RN55C	RES - METAL FILM - 68.1 OHM - 1% - .12W
R22	010623	81349	RN55C5900F	RES - METAL - 590 OHM - 1% - 1/10W
R23	600245	--	L-2007-1LP	JUMPER, INSULATED
R24	600245	--	L-2007-1LP	JUMPER, INSULATED
R25	600245	--	L-2007-1LP	JUMPER, INSULATED
R26	600245	--	L-2007-1LP	JUMPER, INSULATED
R27	600245	--	L-2007-1LP	JUMPER, INSULATED
R28	040307	73138	68WR1K	POT CERMET - 1K - 10%
R29	010917	81349	RN55C3320F	RES - METAL - 332 OHM - 1% - 1/10W
R30	010917	81349	RN55C3320F	RES - METAL - 332 OHM - 1% - 1/10W
R31	000202	81349	RC07GF202J	RES - CARBON - 2K - 5% - 1/4W
R32	000202	81349	RC07GF202J	RES - CARBON - 2K - 5% - 1/4W
R33	000100	81349	RC07GF100J	RES - CARBON - 10 OHM - 5% - 1/4W
R34	000100	81349	RC07GF100J	RES - CARBON - 10 OHM - 5% - 1/4W
S1	454619	21793	454619	SWITCH, DP-DT
TP1	453900	--	--	PIN, GUIDE PCB ALIGNMENT
TP2	600786	00779	4-87022-2	TERMINAL POST, STRIP

REF. DES.	RACAL-DANA P/N	FSC	MFG. P/N	DESCRIPTION
TP3	600786	00779	4-87022-2	TERMINAL POST, STRIP
TP4	600786	00779	4-87022-2	TERMINAL POST, STRIP
TP5	600786	00779	4-87022-2	TERMINAL POST, STRIP
TP6	600786	00779	4-87022-2	TERMINAL POST, STRIP
U1	230573	04713	MC3430	IC - BUFFER
U2	230573	04713	MC3430	IC - BUFFER
U3	230573	04713	MC3430	IC - BUFFER
U4	230573	04713	MC3430	IC - BUFFER
U5	230631	21793	230631	IC - SELECT, QUAD COMP
U6	230636	18324	74LS244F	IC - OCTAL BUFFER
U7	230636	18324	74LS244F	IC - OCTAL BUFFER
U8	230636	18324	74LS244F	IC - OCTAL BUFFER
U9	230636	18324	74LS244F	IC - OCTAL BUFFER
U10	230636	18324	74LS244F	IC - OCTAL BUFFER
U11	230636	18324	74LS244F	IC - OCTAL BUFFER
U12	230636	18324	74LS244F	IC - OCTAL BUFFER
U13	230636	18324	74LS244F	IC - OCTAL BUFFER
U14	230636	18324	74LS244F	IC - OCTAL BUFFER
Z1	080058	11236	750-101-R15K	RES - CERMET - NETWORK - 10P,9R - 15K
Z2	080058	11236	750-101-R15K	RES - CERMET - NETWORK - 10P,9R - 15K

REF. DES.	RACAL-DANA P/N	FSC	MFG. P/N	DESCRIPTION
26	411671	21793	411671	PC BOARD, VAR. THRESHOLD PROBE (UNSTUFFED)
30	454684	21793	454684	BRACKET, FLAT CABLE
31	454699	21793	454699	PLATE, CABLE RETAINER
35	601071	--	--	CABLE, SHIELDED
36	610112	46384	KF2-440	NUT, PRESS, SPLINE, 4-40 - (2 REQ'D)
37	610198	--	--	WASHER, NYLON, #4 - (4 REQ'D)
38	615044	--	--	MACHINE SCREW, PHILLIPS PANHEAD, 4-40 X .375 - (2 REQ'D)
39	617077	--	--	INTERNAL LOCK WASHER, #4 - (2 REQ'D)

404227 - PROBE ASSEMBLY, FIXED THRESHOLD A

REF. DES.	RACAL-DANA P/N	FSC	MFG. P/N	DESCRIPTION
1	401670	21793	401670	PCB ASSY., FIXED THRESHOLD
2	404231	21793	404231	GRABBER KIT, OPT.
3	454576	21793	454576	CASE, PROBE, 20 PIN
4	454582	21793	454582	COVER, PROBE, 20 PIN
6	454584	21793	454584	RETAINER, PROBE PCB - (4 REQ'D)
7	601070	21793	601070	CABLE ASSY.
8	615019	--	--	MACHINE SCREW, PHILLIPS PANHEAD, 2-56 X .625 - (4 REQ'D)
9	920943	21793	920943	LABEL, PROBE, FIXED THRESHOLD
11	920953	21793	920953	LABEL. SERIAL NO., PROBE

401670 - PCB ASSEMBLY, FIXED THRESHOLD PROBE D

REF. DES.	RACAL-DANA P/N	FSC	MFG. P/N	DESCRIPTION
C1	100132	51406	PP600Y5RZ	CAP - CERAM - .01 MFD - 12V
C2	100132	51406	PP600Y5RZ	CAP - CERAM - .01 MFD - 12V
C3	110126	05397	T368B685M035AS	CAP - TANTA - 6.8 MFD - 35V - 20%
C4	100132	51406	PP600Y5RZ	CAP - CERAM - .01 MFD - 12V
C5	100132	51406	PP600Y5RZ	CAP - CERAM - .01 MFD - 12V
C6	100132	51406	PP600Y5RZ	CAP - CERAM - .01 MFD - 12V
J300	601060	06776	IDM-20LP-SR3	CONN - 20P, RT ANGLE, HEADER
L1	310052	99800	1025-52	CHOKE - 22 uH
R1	000472	81349	RC07GF472J	RES - CARBON - 4.7K - 5% - 1/4W
R2	000472	81349	RC07GF472J	RES - CARBON - 4.7K - 5% - 1/4W
TP1	600786	00779	1-87022-0	POST, MACHINE APPLIED STRIP
TP2	600786	00779	1-87022-0	POST, MACHINE APPLIED STRIP
U1	230666	18324	N8T98N,F	IC - HEX, INT.
U2	230666	18324	N8T98N,F	IC - HEX, INT.
U3	230666	18324	N8T98N,F	IC - HEX, INT.
U4	230666	18324	N8T98N,F	IC - HEX, INT.
U5	230636	18324	74LS244F	IC - OCTAL BUFFER
U6	230636	18324	74LS244F	IC - OCTAL BUFFER
U7	230636	18324	74LS244F	IC - OCTAL BUFFER
U8	230636	18324	74LS244F	IC - OCTAL BUFFER

REF. DES.	RACAL-DANA P/N	FSC	MFG. P/N	DESCRIPTION
U9	230636	18324	74LS244F	IC - OCTAL BUFFER
Z1	080049	81349	760-3-47	RES - NETWORK - 14P - 47 OHM
Z2	080049	81349	760-3-47	RES - NETWORK - 14P - 47 OHM
Z3	080049	81349	760-3-47	RES - NETWORK - 14P - 47 OHM
7	411670	21793	411670	PC BOARD, FIXED THRESHOLD PROBE (UNSTUFFED)
11	601071	--	--	CABLE, SHIELDED

404243 - PCB ASSEMBLY, EXTENDER, ABC/WG B

REF. DES.	RACAL-DANA P/N	FSC	MFG. P/N	DESCRIPTION
1	410773	21793	410773	PC BOARD, EXTENDER (UNSTUFFED)
2	454620	21793	454620	CONNECTOR, 72 PIN
3	610950	05574	091-0024-000	KEY, POLARIZING

404267 - PCB ASSEMBLY, EXTENDER, CPU/CON B

REF. DES.	RACAL-DANA P/N	FSC	MFG. P/N	DESCRIPTION
1	410774	21793	410774	PC BOARD, EXTENDER (UNSTUFFED)
2	454620	21793	454620	CONNECTOR, 72 PIN
3	610950	05574	091-0024-000	KEY, POLARIZING

404268 - PCB ASSEMBLY, EXTENDER, GPIB B

REF. DES.	RACAL-DANA P/N	FSC	MFG. P/N	DESCRIPTION
1	410775	21793	410775	PC BOARD, EXTENDER (UNSTUFFED)
2	454623	21793	454623	CONNECTOR, 44 PIN
3	610950	05574	091-0024-000	KEY, POLARIZING

404182 - RACK MOUNT KIT (7") C

REF. DES.	RACAL-DANA P/N	FSC	MFG. P/N	DESCRIPTION
1	454424	21793	454424	EAR, MOUNTING - (2 REQ'D)
2	454459	21793	454459	INSERT, CORNER - (2 REQ'D)
4	615325	--	--	SCREW, PFH, 82°CSK, 8-32 X .500 - (4 REQ'D)
6	980557	21793	980557	INSTRUCTION SHEET

RACAL-DANA Instruments Inc.

U. S. REPRESENTATIVES

ALABAMA
Saber Associates
P.O. Box 5990
Huntsville, AL 35805
(800) 327-0853

ALASKA
See California
(503) 241-8624

ARIZONA
See California
(602) 252-5242

ARKANSAS
See Oklahoma

CALIFORNIA
Racal-Dana Instruments Inc.
4 Goodyear Street
P.O. Box C-19541
Irvine, CA 92713
(714) 859-8999
(213) 628-8825
(408) 727-2341

COLORADO
See California
(303) 592-1717

CONNECTICUT
See Virginia
(617) 890-7195

DELAWARE
See Virginia
(609) 853-1605

DISTRICT OF COLUMBIA
Racal-Dana Instruments Inc.
5101-D Backlick Road
Annandale, VA 22003
(703) 941-0525

FLORIDA
Saber Associates - Head Office
1507 S. Riverview Drive
Melbourne, FL 32901
(305) 724-0920 or
(800) 432-6288

FLORIDA (continued)
P.O. Box 100
Longwood, FL 32750

P.O. Box 1763
Bradenton, FL 33506

P.O. Box 8669
Coral Springs, FL 33065

GEORGIA
Saber Associates
P.O. Box 1633
Cummings, GA 30130
(800) 327-0853

HAWAII
See California
(714) 859-8999

IDAHO
See California
(714) 859-8999

ILLINOIS
Racal-Dana Instruments Inc.
55 W. 22nd St., Suite 101
Lombard, IL 60148
(312) 932-4922

INDIANA
See Illinois
(800) RAC-DANA

IOWA
See Illinois
(800) RAC-DANA

KANSAS
See Illinois
(800) RAC-DANA

KENTUCKY
See Illinois
(800) RAC-DANA

LOUISIANA
See Texas
(713) 780-2511

MAINE
See Virginia
(617) 890-7195

MARYLAND
See Virginia
(703) 941-0525

MASSACHUSETTS
See Virginia
(617) 890-7195

MICHIGAN
See Illinois
(800) RAC-DANA

MINNESOTA
See Illinois
(800) RAC-DANA

MISSISSIPPI
See Alabama
(800) 327-0853

MISSOURI
See Illinois
(800) RAC-DANA

MONTANA
See California
(714) 859-8999

NEBRASKA
See Illinois
(800) RAC-DANA

NEVADA
See California
(714) 859-8999

NEW HAMPSHIRE
See Virginia
(617) 890-7195

NEW JERSEY
See Virginia
(609) 853-1605

NEW MEXICO
See California
(602) 252-5242

NEW YORK
See Virginia
(516) 242-3454

NORTH CAROLINA
Saber Associates
P.O. Box 826
Clayton, NC 27520
(800) 327-0853

NORTH DAKOTA
See Minnesota
(800) RAC-DANA

OHIO
See Illinois
(800) RAC-DANA

OKLAHOMA
Data Marketing Associates
6921 S. Canton Avenue
Tulsa, OK 74136
(918) 496-1457

OREGON
See California
(503) 241-8624

PENNSYLVANIA
Eastern - See Virginia
(609) 853-1605

Western - See Illinois
(800) RAC-DANA

PUERTO RICO
See Florida

RHODE ISLAND
See Virginia
(617) 890-7195

SOUTH CAROLINA
Saber Associates
P.O. Box 2772
Columbia, S.C. 29202
(800) 327-0853

SOUTH DAKOTA
See Minnesota
(800) RAC-DANA

TENNESSEE
See Alabama
(800) 327-0853

TEXAS
Data Marketing Associates
3303 Northland Drive
Suite 115
Austin, TX 78731
(512) 451-5174

14235 Proton Road
Dallas, TX 75234
(214) 661-0300

9777 Harwin Street
Suite 509
Houston, TX 77036
(713) 780-2511

833 Isom Road
San Antonio, TX 78216
(512) 342-3031

UTAH
See California
(714) 859-8999

VERMONT
See Virginia
(617) 890-7195

VIRGINIA
Racal-Dana Instruments Inc.
5101-D Backlick Road
Annandale, VA 22003
(703) 941-0525

WASHINGTON
See California
(503) 241-8624

WEST VIRGINIA
Eastern - See Virgin
(703) 941-0525

Western - See Illinc
(800) RAC-DANA

WISCONSIN
See Illinois
(800) RAC-DANA

WYOMING
See California
(714) 859-8999

CANADA
Webster Instruments
1134 Aerowood Drive
Mississauga, Ontario
Canada L4W 1Y5
(416) 625-0600

880 Lady Ellen Place
Suite 3
Ottawa, Ontario
Canada KIZ 569
(613) 725-1931

750 Laurentien Blvd.
Suite 115
St. Laurent P.Q.
Canada H4M 2M4
(514) 744-5829

#208 Campbell Center
200 Carnegie Drive
St. Albert, Alberta
Canada T8N 3K1
(403) 458-4669

4211 Kingsway
Suite 509
Burnaby, B.C. V5H 3Y
(604) 434-2611

RACAL-DANA Instruments Inc.

U. S. AND CANADIAN SERVICE CENTERS

FACTORY SERVICE

RACAL-DANA INSTRUMENTS INC.
4 Goodyear Street
Irvine, California 92714
Telephone: (714) 859-8999

PRODUCT SERVICE TWX 910-595-1136

REGIONAL SERVICE CENTER

RACAL-DANA INSTRUMENTS INC.
5101 "D" Blacklick Road
Annandale, Virginia 22003
Telephone: (703) 941-0525

REPAIR REQUEST FORM

To allow us to better understand your repair requests, we suggest you use the following outline and include a copy with your instrument to be sent to your local Racal-Dana repair facility.

Model Number _____ Options _____ Date _____

Serial Number _____ P. O.# _____

Company Name _____

Address _____

City _____ State _____ Zip Code _____

Contact _____ Phone Number _____

1. Describe, in detail, the problem and symptoms you are having.

_____

_____

2. If you are using your unit on the bus, please list the program strings used and the controller type, if possible.

_____

_____

3. List all input levels, and frequencies this failure occurs.

_____

_____

4. Indicate any repair work previously performed.

_____

_____

5. Please give any additional information you feel would be beneficial in facilitating a faster repair time. (I. E., modifications, etc.)

_____

_____

MP MASTER
MA31100